AIR EXPERT

air springs



CATALOGUE 2010

PRODUCT PARTS

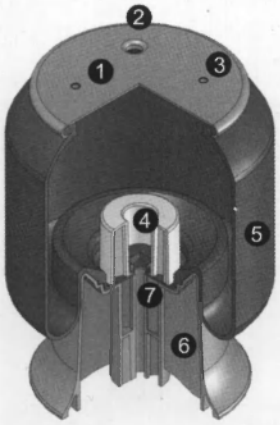

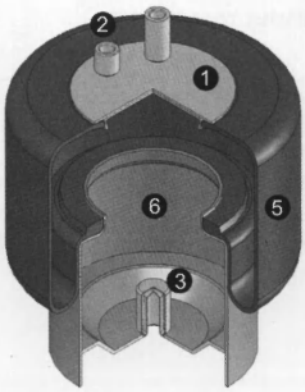

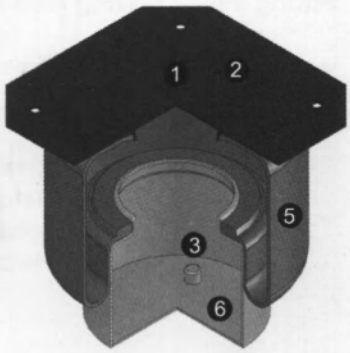

1. Top Plate
2. Air Inlet
3. Bolts or Blind Nuts
4. Bumper
5. Rolling Lobe (Bellow)
6. Bottom Bowl
7. Piston (Metal or Plastic)
8. Convoluted Rolling Lobe



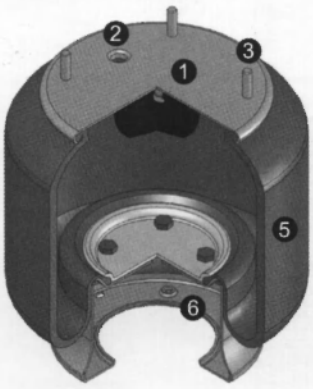

INSTALLATION GUIDELINES

Removing the used air spring from the vehicle

1. Jack up the vehicle securely as high as possible. Make sure that, it can not fall of it's supports.
2. Let the air out of the air spring system.
3. Remove the used & old air spring from the vehicle
4. For conical air springs, the narrow end should be placed on the piston part.

Fitting a new Rolling lobe air spring without metal parts

1	Clean the bead seats on the clamping plate and the piston. Check that the mounting equipment is free or burr and is not corroded. Apply a soap solution or an approved fitting lubricant (Do NOT use Grease !) to the bead seat of the piston.	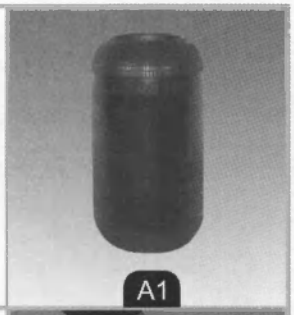 A1
2	Compres the air spring with the hand while pushing it below the upper bead.	 A2
3	Fix the lower bead to its seat on the piston and the upper bead to its sead on the clamping plate. Ensure that, the axle is completely sprung out.	 A3
4	Pressurise the air spring so that its beads fit correctly between the plate and piston. The beads should snap into place. Place the compressed air spring between the piston and the clamping plate.	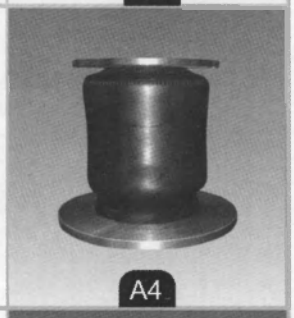 A4
5	1. When you lower the vehicle, the air spring will automatically roll down the piston.The air spring is now fitted.	 A5

INSTALLATION GUIDELINES

Fitting a new Rolling lobe air spring with metal parts

The complete air springs are usually supplied with bolts and threads which attach the complete assembly to the vehicle.

The piston and the bottom clamping plate should be cleaned if the piston is to be re-used.

1	Fit the air spring to the chassis with top plate. Press the bottom bead into an oval shape and push the bottom clamping plate through.	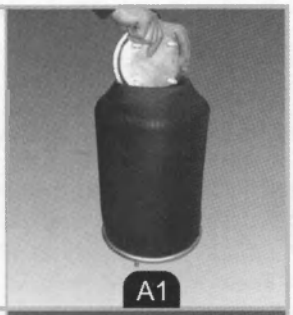 A1
2	Place the piston and bottom plate as they take place in the same direction with the holes on the axles and then push the plate into the holes of piston	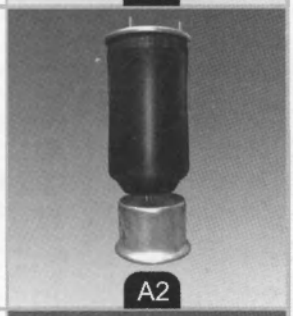 A2
3	Bolt piston to the plate tightly and make sure it does not twist.	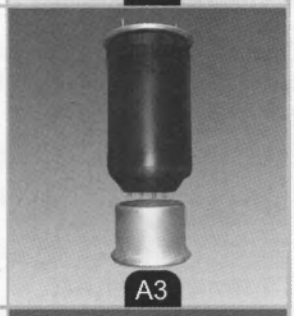 A3
4	Fit piston on the axle of the vehicle, inflate the air spring and lower the vehicle. The Rolling lobe is now fitted and will automatically roll down the piston.	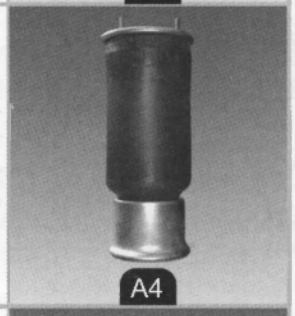 A4
5	MD 1813-AK	

CAUSES of FAILURE & PREVENT THEM

OVEREXTENSION

Cause of Failure :

The air spring is operated outside
the maximum rebound range as a result of unrestrained (missing end stop)
or excessive axle travel (defective/improperly adjusted height
levelling system or wrong air spring).
The abuse may result in seperation of the bellows from upper or lower mounting parts.

Appearance or condition :

- Bead plate convex, especially around blind nuts or studs
- Rubber bellows seperated from bead plate
- Leaking at blind nuts or studs
- Leaking at end closure (reversible sleeve)
- Loose girdle hoop on convoluted style

Possible Causes :

- Defective levelling value
- Ride position too high
- Defective upper stop (lift)
- Wrong air spring (too short)

Recommendation :

Check and/or adjust height levelling system, shocks, end stops and air spring specifications to prevent air spring travel of exceeding the max. recommended height.

ABRASION

Cause of Failure :

Bellows in contact with other components
(e.g. defective parts) of the vehicle or foreign objects (e.g. dirt, rocks) that accumulate at the piston/Rolling part of the bellow. They may rub through the bellows during spring deflection.

Appearance or condition :

- Hole rubbed into side of bellows
- Hole in bellows area that rolls over piston (reversible slleve style)

Possible Causes :

- Structural interference, such as broken shock, loose air line, misalignment, worn bushings
- No air pressure (reversible sleeve style)
- Foreign material (sand, rocks, etc)
- Wrong air spring

Recommendation :

- Avoid contact between bellows and any other part of the vehicle.
- Check air springs periodically / remove foreign objects from rolling part of the bellows.
  (Do NOT use solvents for washing)

OVERLOAD

Cause of Failure :

When overloading the vehicle the height levelling valve will open to adjust vehicle height by increasing the pressure inside the air spring up to max. system pressure available. The improper usage of the air spring system outside the recommended pressure range may cause deformation or damage to the bellows, piston and/or bead plate.

Recommendation :

Avoid overloading of the vehicle.
Check air spring specifications for maximum load capacity.

CONTAMINATION (CHEMICALS)

Cause of Failure :

Air spring bellows are NOT resistant to solvents, hydraulic oils nor lubricants. A permanent exposure to chemicals will cause premature failure of air spring system.

Recommendation :

- Check the air spring system periodically.
- Avoid too much oil in the air supply lines.
- Remove lubricants from the bellows.
- Do NOT use mineral oil based cleaners.
- Do NOT use any solvents.

WARNING !

Do not inflate unless fully secured in the suspension system of the vehicleor insome other appropriate structure. Pressure may exceed 100 psl / 7 bar.

Otherwise there is a danger of injurry!

Working Temperature: -40 'C to 70 'C / -40 'F to 158 'F

Please take into consideration warnings on products.

All O.E.M. & Cross reference numbers at the catalogue are presented just for comparing.
It is not implied that any part listed is the product of these manufacturer.
No responsibility will be accepted for damages arising from advice given in this catalogue.
© 2009 by Meklas Air Suspension Systems. All Rights Reserved.

Other Manufacturer's Cross References

CONNECT REF.	REMARKS	PAGE	System ID	weight(kg)	QTP(pcs)	CONTITECH	FIRESTONE		GOODYEAR	PHOENIX	AIRTECH	AIRKRAFT	CF GOMMA	DUNLOP
M 1644		1	100001-CO	1,45	50	644 N	1R 1A 390-295	W01 095 0118	8017	1 E 21	3644		1 S 285-24	D11S01
M 1661		1	100002-CO	2	35	661 N	1R 1C 390-310	W01 095 0021	9018	1 E 25	3661		1 S 310-28	D12S02
M 1662		1	100003-CO	2,9	25	662 N	1R 1D 355-355	W01 095 0207/0030	9007	1 E 32	3662		1 SC 360-30	D13S01
M 1673		2	100004-CO	1,4	50	673 N	1R 1A 370-285	W01 095 0198	8012	1 F 21 A	3673		1 SC 285-22	
M 1701		2	100005-CO	2,6	35	701 N	1R 3M 340-340	W01 095 0205	9006		3701			
M 1706		2	100006-CO	1,85	30	706 N			9067		3706			
M 1713		3	100007-CO	2,35	40	713 N			9066	1 F 21 D	3713			
M 1715		3	100008-CO	1,7	35	715 N	1R 1C 335-310	W01 095 0087	8015	1 F 25	3715		1 SC 310-16	PNP 304890101
M 1716		3	100009-CO	2	30	716 N	1R 2A 450-305	W01 095 0145		1 F 26 B-1	3716		1 SC 300-34	
M 1719		4	100010-CO	2,9	20	719 N	1R 2D 530-360	W01 095 0192	8118	1 F 32 B	3719		1 SC 360-43	PNP 304620101
M 1720		4	100011-CO	1,9	40	720 N	1R 2A 460-295	W01 095 0195	9008	1 F 21	3720		1 SC 290-30	D12S04
M 1727		4	100012-CO	2,55	25	727 N	1R 2D 460-360	W01 095 0191	8117	1 F 32 A	3727		1 SC 360-34	D13S04
M 1728		5	100013-CO	2,5	25	728 N	1R 2D 470-360	W01 095 0419		1 R 2D 470-360	3728		1 SC 360-34	PNP 306420100
M 1737		5	100014-CO	2	30	737 N	1R 2A 480-330	W01 095 0211		1 F 26	3737		1 S 320-23	
M 1746		5	100015-CO	2,2	30	746 N					3746			
M 1757		6	100016-CO	1,8	30	757 N	1R 2A 380-305	W01 095 0212		1 F 26 C	3757			
M 1762		6	100017-CO	2,3	25	762 N	1R 2D 390-360	W01 095 0190	9010	1 F 32	3762		1 SC 360-30	
M 1768		6	100018-CO	1,95	35	768 N	1R 2A 380-330	W01 095 0213			3768			
M 1769		7	100019-CO	1,95	35	769 N					3769		1 SC 240-30	D10S02
M 1782		7	100020-CO	1,5	50	782 N	1R 1A 415-285	W01 095 0197	9013	1 E 782	3782		1 S 270-25 C	
M 1786		7	100021-CO	1,25	50	786 N				1 F 14	3786			
M 1809		8	100022-CO	3,5	30	809 NTB	1 R 12-709			1 D 23 C-1	3809		1 T320SP 89753	
M 1810		8	*	1,6	30	810 NTB	1T 19 L-7	W01 M58 0491					1 T19E-1 - 93702	
M 1817		8	*	1,6	30	817 N					3717			
M 1819		9	100024-CO	1	60	819 N					3819			
M 1838		9	100025-CO	2,38	30	838 N				1 F 26 D	3838			
M 1873		9	*	1,6	30	873 N					3873			
M 1876		10	100049-CO	1,6	30	876 N			8314		3876			
M 1882		10	100026-CO	1,7	50	882 N1				1 F 16	3882		1 SC 250-28	
M 1883		10	100027-CO	1,95	40	883 N1 9012				1 F 21 C-2	3883		1 SC 250-29 - 204250	
M 1884		11	100028-CO	1,7	50	884 N			9002	1 F 20 A	3884		1 S 270-25C	
M 1896		11	100029-CO	1,8	50	896 N	1R 1J 520-285 FF	W01 095 0245		2 E 18 A	3896		1 S 285-18	SP 2191
M 1897		11	100030-CO	1,75	40	897 N	1R 1K 440-320 FF	W01 095 0229	8028	2 E 23	3897		1 S 320 30	SP 2192
M 1916		12	100031-CO	1,9	40	916 N1			9015	1 F 21 C-5	3916			
M 1921		12	*	1,9	40	921 N	1R 1A 415-260	W01 095 0226	8043		3921		1 S 285-23	D10S04
M 1927		12	100032-CO	1,3	60	927 N	1R 1J 415-285 FF	W01 095 0244	8037	2 E 18 B	3927			PNP 300080100
M 1928		13	100033-CO	1,6	40	928 N	1R 1K 380-320 FF	W01 095 0228	8042	2 E 23 A	3928			D12S03
M 1936		13	*	1,6	40	936 N					3936			D12S01
M 1943		13	100034-CO	1,2	70	943 N	1R 1A 260-285	W01 095 0189	9001		3943		1 S 285-18	D11S03
M 1944		14	100035-CO	1,4	50	944 N	1R 1A 370-285	W01 095 0198	8012		3944		1 S 285-22	SP1217
M 1945		14	100036-CO	1,65	50	945 N	1R 1A 460-290	W01 095 0063	9014	1 E 21 C	3945		1 S 285-25	D11S2
M 1975		14	100048-CO	1,2	70	975 N	1R 1T 320 195	W01 095 0437		1 E 10	3975			
M 11421		15	100037-CO	2,35	30	1421 N					31421			
M 11720		15	*	4,1	30	1720 N					31720			
M 11885		15	100038-CO	1,85	40	1885 N1	1R 2A 445 280	W01 095 0429	9003	1 F 208	31885		1 SC 270-28	D12S07
M 11888		16	100039-CO	2,2	35	1888 N								
M 11924		16	100040-ST	1,85	40	1924 N1					31924			
M 190453	* for this reference please contact sales dept.	16	*	1,6	50		1R 4U 395 260	W01 095 0453			31277			A 310 950013
M 1404	* for this reference please contact sales dept.	17	100041-CO	1,15	70									
M 141525		17	100042-CO	1,85	40	RZ 415-25	1R 5P 345-290	W01 095 0381	9004	2 G 20	3415-25		1 S 280-25	D12S08
M 141528		17	100043-CO	2,25	40	RZ 415-28	1R 5P 410-290	W01 095 0382	9005	2 G 20 A	3415-28		1 S 280-28	D12S09
M 145025		18	*	1,6	50	RZ 450-25					3450-25		1 S 300-27	D12S13
M 11415		18	100023-CO	3,8	30	1415 N								
M 11774		18	100044-CO	4,1	20	1774 N					31774			
MD 1724-K		19	160187-CO	12,5	30						3724 K			
MD 1725-K02		19	160002-CO	18,02	20	725 N P02	1T 66 F-10.8	W01 M58 8969	1 R 14-747		3725-K			
MD 1725-K03	Middle bolt assembling at bottom	19	160001-CO	18,02	20	725 N P03	1T 66 F-10.8	W01 M58 8610	1 R 14-756		3725-01 K			
MD 1810		20	130002-CO	5,27	22	810 MB/0				1 D 28 A-5 NP.	3810 P			
MD 1810-K		20	160004-CO	11	20	810 MB	1T 19 L-7	W01 M58 6345	1 R 14-716	1 D 28 A-2	3810 K		1 T 19 E-1	
MD 1810-KP	Composite piston	20	160005-CO	8	22	810 MB	1T 19 L-7	W01 M58 8775						
MD 1811		21	130003-CO	5,2	22		1T 19 L-11	W01 M58 7370	1 R 14-721		3811-02K			
MD 1811-02		21	130005-CO	4,91	22		1T 19 L-11	W01 M58 6335			3811-01K		1 T 19 E-2	
MD 1811-K		21	160008-CO	12,65	22		1T 19 L-11	W01 M58 6334		1 D 28 B-2E2				
MD 1811-03		22	130006-CO	5,49	22	811 MB/0	1T 19 F-11	W01 M58 6359			3811- P			

CONNECT REF.	REMARKS	PAGE	System ID	weight(kg)	QTP(pcs)	CONTITECH	FIRESTONE		GOODYEAR	PHOENIX	AIRTECH	AIRKRAFT	CF GOMMA	DUNLOP
MD 1811-K02	* for this reference please contact sales dept.	22	*	11,65	22									
MD 1811-K03		22	160011-CO	12,6	22	811 MB	1T 19 L-11	W01 M58 6334	1 R 14-718				1 T 19 E-2	
MD 1811-04	* for this reference please contact sales dept.	23	130007-CO	5,49	22									
MD 1811-16		23	130004-CO	4,87	22		1T 19 F-11	W01 M58 6359			3811-03 P			
MD 1811-K05	45 ° axial difference according to MD 1811-K	23	160012-CO	11,69	22		1T 19 L-11	W01 M58 7370	1 R 14-705		3811-02K			
MD 1811-K16		24	160009-CO	11,58	22	811 M 16 K1	1T 19 L-11	W01 M58 6359	1 R 14-719	1 D 28 B-7	3811-03K			
MD 1813		24	130008-CO	5,7	22	813 MB/0				1 D 28 B-5 NP.	3813 P			
MD 1813-K		24	160013-CO	12,65	22	813 MB			1 R 14-711	1 D 28 B-2	3813 K		1 T 19 E-2	
MD 1813-KP	Composite piston	25	160014-CO	9	22		1T 19 L-11	W01 M58 6339						
MD 1836-01		25	130009-CO	3,99	30	836 M	1T 17 AR-4.5	W01 M58 0776	1 R 12-700	1 DF 25-1 NP.	3836 P			
MD 1836-K01		25	160015-CO	8,15	25	836 M K1	1T 17 AR-4.5	W01 M58 8722	1 R 12-712	1 DF 25-11	3836 K			
MD 1836-02		26	130010-CO	4	30	836 M 2	1T 17 AR-4.5	W01 M58 0777	1 R 12-710	1 DF 25-3 NP	3836-02 P			
MD 1836-04		26	130011-CO	4,32	30	836 MB	1T 17 AR-4.5	W01 M58 0775	1 R 12-764	1 DF 25-4 NP.	3836-01			
MD 1836-K02		26	160016-CO	8,25	25	836 M2 K1	1T 17 AR-4.5	W01 M58 8721	1 R 12-711	1 DF 25-13	3836 K02			
MD 1836-K04		27	160017-CO	4,3	30	836 MB K4	1T 17 AR-4.5	W01 M58 8705		1 DF 25-14	3836 K04			
MD 1836-K06		27	160018-CO	9	25	836 MB K6	1T 17 AR-4.5	W01 M58 8701	1 R 12-768	1 DF 25-15	3836 K06			
MD 1881		27	130012-CO	7	20	881 MB	1T 66 F-10.8	W01 M58 8978	1 R 14-708	1 DK 32	3881 P		1 TC 360-45	
MD 1881-K		28	160019-CO	17,35	20		1T 66 F-10.8	W01 M58 8966	1 R 14-712		3881 K		1 TC360-45	
MD 1881-K01	180 ° axial difference according to MD 1881-K	28	160169-CO	17,3	20		1T 66 F-10.8	W01 M58 8966			3881 K01		1 TC360-45	
MD 1881-KP		28	160021-CO	12,3	20		1T 66 F-10.8	W01 M58 8667			3881 KP			
MD 1881-KP01	180 ° axial difference according to MD 1881-KP	29	160173-CO	12,3	20						3881 KP01			
MD 1887		29	130071-CO	3,1	30	887 M	1T 15 LNR-3	W01 M58 0780	1 R 11-796		3887 P			
MD 1887-K		29	160094-CO	6,6	25	887 MK1	1T 15 LNR-3	W01 M58 8681						
MD 1887-K06		30	160095-CO	8	25	887 NP04					3887 K			
MD 1889-K		30	160133 CH	8	25	889 MK2	1T 15 LLR 5	W01 M58 8679						
MD 1902-K		30	160106-CO	14,8	22	902 MB	1T 19 G-12	W01 M58 9910			3902 K			
MD 1940		31	130013-CO,	4,8	30	940 MB	1T 17 D-4.3	W01 M58 8613	1 R 11-703	1 DK 21 K	3940 P			
MD 1940-K		31	160023-CO	11,4	30		1T 17 D-4.3	W01 M58 8609	1 R 11-763		3940 K			
MD 1940-KP		31	160024-CO	8,52	30		1T 17 D-4.3	W01 M58 8585	1 R 11-752		3940 KPP			
MD 1940-K01	180 ° axial difference according to MD 1940-K	32	160171-CO	11,4	30		1T 17 D-4.3	W01 M58 8609			3940 K			
MD 1940-KP01	180 ° axial difference according to MD 1940-KP	32	160175-CO	8,52	30						3940 01KPP			
MD 1941		32	130014-CO	4,96	30	941 MB	1T 17 D-8.3	W01 M58 8620	1 R 11-700	1 DK 21	3941 P		1 T 300-36	
MD 1941-K		33	160025-CO	12,3	30		1T 17 D-8.3	W01 M58 8619	1 R 11-701		3941 K			
MD 1941-K01	180 ° axial difference according to MD 1941-K	33	160172-CO	12,3	30									
MD 1941-KP		33	160026-CO	9,55	30		1T 17 D-8.3	W01 M58 8668	1 R 11 743		3941 KPP			
MD 1941-KP01	180 ° axial difference according to MD 1941-KP	34	160176-CO	9,55	30									
MD 1942		34	130015-CO	7,25	20	942 MB	1T 66 F-13.5	W01 M58 8611	1 R 14-700	1 DK 32 L	3942 P			
MD 1942-K		34	160027-CO	16,2	20		1T 66 D-13.5	W01 M58 8584	1 R 14-781		3942 K			
MD 10081-K		35	160086-CO	14	25		1T 17 B-11	W01 M58 8747	1 R 13-150		30081 K			
MD 10302-K		35	160091-CO	8,6	30		1T 15 VPR-3	W01 M58 8193	1 R 12-809		330302 K			
MD 10304-K		35	160084-CO	7,55	30						330304 K			
MD 10305-K		36	160138-CO	7,55	30						330305 K			
MD 12143-K	* for this reference please contact sales dept.	36	160090-CO	7,05	30									
MD 12725		36	130001-CO	5,57	20						32725 P			
MD 12725-K		37	160003-CO	18,02	20						32725 K			
MD 14004		37	130016-CO	5,35	30	4004 N P02	1T 17 BS-6	W01 M58 0919	1 R 11-705	1 DK 22 E-5 NP.	34004 P		1 T 19 E-5 steel	
MD 14004-K		37	160028-CO	9,32	25		1T 17 BS-6	W01 M58 6366	1 R 11-706	1 DK 22 E-5	34004 K		1 T 300-37	D12B13
MD 14004-KP	Composite piston	38	160029-CO	7,2	25	4004 NP 03	1 T 17 BS-6	W01 M58 6366	1 R 11-713		34004 KPP		1 T 300-37	D12B13
MD 14022		38	130017-CO	5,35	30	4022 N P02	1T 17 BS-6	W01 M58 0756	1 R 11-709	1 DK 22 E-9 NP.	34022 P			
MD 14022-K		38	160030-CO	9,32	25		1T 17 BS-6	W01 M58 6367	1 R 11-710	1 DK 22 E-9	34022 K		1 T 300-37	D13B25
MD 14022-KP	Composite piston	39	160031-CO	7,2	25	4022 NP 03	1 T 15 BS-6	W01 M58 6367	1 R 11-714	1 DK 22 E-9	34022 KPP			D13B25
MD 14022-KP05	Composite short piston	39	160032-CO	7,3	25	4022 N P05	1 T 17 BS-6	W01 M58 8612	1 R 11-781	1 DK 22 E-11	32619 KPP			
MD 14023		39	130018-CO	5,47	22	4023 N					34023 P		1T 19E-2	
MD 14023-K		40	160033-CO	11,65	22	4023 NP 03	1T 19 F-11	W01 M58 6348	1 R 14-729		34023 K		1 T 19 E-2	D13B26
MD 14023-KP	Composite piston	40	160034-CO	9	22	4023 NP 03	1T 19 F-11	W01 M58 6348	1 R 14-729		34023 KPP		1 T 19 E-2	
MD 14028		40	130019-CO	5,47	30	4028 N			1 R 14-782	1 D 28 B-10 NP	34028 P			
MD 14028-K		41	160035-CO	13,05	25	4028 N P02	1T 19 L-12	W01 M58 8106	1 R 14-783	1 D 28 B-10	34028 K			
MD 14156		41	130021-CO	4,65	30	4156 N P05	1T 15 M-6	W01 M58 9361			34156 P		1 T 323-32	
MD 14156-K		41	160036-CO	10,2	25	4156 N P07	1T 15 M-6	W01 M58 9361	1 R 12-704		34156 K		1 T 323-32	D12B19
MD 14156-16		42	130023-CO	4,9	30						34156-06P			
MD 14156-K05		42	160041-CO	12,4	25	4156 N P09	1T 15 M-6	W01 M58 9089	1 R 12-706		34156 K03			
MD 14156-KP		42	160037-CO	6,9	25	4156 N P15	1T 15 M-6	W01 358 9361			34156 KPP		1 T 323-33	D12B19
MD 14156-KP16		43	160042-CO	6,8	25		1T 15 M-6	W01 M58 7295			34156-07KPP			
MD 14156-KP88		43	160040-CO	6,9	25		1T 15 M-6	W01 455 6288						
MD 14157-04	* for this reference please contact sales dept.	43	130026-CO	5,27	30									
MD 14157-05	* for this reference please contact sales dept.	44	130024-CO	5,27	30									
MD 14157-KP04		44	160046-CO	7,1	30	4157 N P04					34157 K			

CONNECT REF.	REMARKS	PAGE	System ID	weight(kg)	QTP(pcs)	CONTITECH	FIRESTONE		GOODYEAR	PHOENIX	AIRTECH	AIRKRAFT	CF GOMMA	DUNLOP
MD 14157-KP05		44	160043-CO	7,1	30	4157 N P05				1 DK 21 K-3				
MD 14157-06	* for this reference please contact sales dept.	45	130027-CO	5,27	30									
MD 14157-14	* for this reference please contact sales dept.	45	130025-CO	5,27	30									
MD 14157-KP06		45	160047-CO	7,1	30	4157 N P06								
MD 14157-15	* for this reference please contact sales dept.	46	130061-CO	5,27	30									
MD 14157-KP14		46	160045-CO	7,1	30		1T 15 MPW-7	W01 M58 6297	1 R 11-111	1 DK 21 A-4	39002 A8-KPP			
MD 14157-KP15		46	160044-CO	7,1	30					1 DK 21 A-3	39002 A3 KPP			
MD 14157-KP08		47	160051-CO	7,1	30	4157 N P08				1 DK 20C-2				
MD 14157-KP09		47	160049-CO	7,1	30	4157 N P09								
MD 14157-KP18		47	*	9	30		1T 15 MPW-7	W01 M58 6317	1 R 11-773		39002-A3/08 KPP			
MD 14157-16	* for this reference please contact sales dept.	48	130028-CO	5,27	30									
MD 14157-KP10	Composite piston with middle assembly type	48	160050-CO	7,1	30	4157 N P10								
MD 14157-KP16		48	160048-CO	7,1	30		1T 15 M9	W01 M58 7307						
MD 14157-KP66		49	160052-CO	7,1	30		1T 15 M6	W01 M57 7295						
MD 14158		49	130029-CO	5,84	30	4158 N P02	1T 15 MPW 9	W01 M58 6257	1 R 12-748	1 DK 20 B-1 NP	34158 P			
MD 14158-KP	Composite piston	49	160053-CO	8,24	25	4158 NP 03	1T 15 MPW-9	W01 M58 6285	1 R 12-749		34158 KPP			D12B22
MD 14159		50	130030-CO	5,5	30	4159 N P05	1T 15 M-9	W01 M58 0736	1 R 12-761	1 DK 21 B-5 NP	34159 P		1 T 323-40	
MD 14159-K		50	160054-CO	11,8	30	4159 N P03			1 R 12-701	1 DK 23 L-27	34159-02 K		1 T323-40	
MD 14159-KP	Composite piston	50	160055-CO	7,52	25	4159 NP14	1T 15 M-9	W01 M58 9130	1 R 12-760		34159-10 KPP			
MD 14159-K03		51	160059-CO	13,7	25						34159 K			
MD 14159-K05		51	160060-CO	13,7	25	4159 NP07	1T 15 M-9	W01M58 8859 /379 9091	1 R 12-702		34159 K05		1 T353-40	
MD 14159-K15	* for this reference please contact sales dept.	51	*	14	25									
MD 14159-KP09	Composite piston with middle assembly type	52	160058-CO	7,5	25	4159 N P09	1T 15 M-9	W01 379 9131	1 R 12-721	1 DK 23 L-25	34159-02 KPP		1 T323-40	
MD 14183	Voss 232	52	130087-CO	3,5	30	4183 N2					34183-23 P			
MD 14183-K	Voss 232	52	160125-CO	11,5	25	4183 NP 23					34183-23 K			
MD 14390-01	Voss 232	53	130032-CO	2,8	30	4390 N1			9507	1 KF 21-1 NP	14390 01 P		1 VSC 285-30	
MD 14390-02	Voss 232	53	130033-CO	2,8	30	4390 N2			9508	1 KF 21-2 NP.	14390-02 P		1 VSC 285-30	
MD 14390-K01	Voss 232	53	160062-CO	6,5	30	4390 N P21				1 KF 21-1	34390-01K			
MD 14390-K02	Voss 232	54	160063-CO	6,55	30	4390 N P22				1 KF 21-2	34390-02K			
MD 14420-K		54	160096-CO	9,4	25	4420 N P01	1T 17 BSR-5	W01 M58 9707			34420 K		1 T 19-E2	
MD 14506-K		54	160085-CO	7,68	30						334506 K			
MD 14644	Voss 232	55	130077-CO	2,8	30	4644 N					36644 P			
MD 14713		55	130034-CO	4,4	30	4713 NP 04			1 R 12-763		34713 P		1 TS 300-28	
MD 14713-K		55	160064-CO	8,05	30	4713 NP 02	1T 17 BSR-8	W01 M58 9706	1 R 12-762	1 DF 22 C-1	34713 K			D12B24
MD 14718-K		56	160065-CO	8,65	22	4718 N P01					34718 K			
MD 14737-K02	Voss 232	56	160066-ST	8,4	25	4737 NP 02					34737-02K			
MD 14757	Voss 232	56	130042-CO	3,07	30	4757 N1			9517		34757 01P			
MD 14757-09	Voss 232	57	130043-CO	3	25	4757 N2 9518					34757 02P			
MD 14757-K	Voss 232	57	160078-CO	8,1	25	4757 NP 01			9517		34757 K01			
MD 14757-K09	Voss 232	57	160079-CO	7,95	25	4757 NP 09					34757 K02			
MD 14810-K05	2 bolts type of MD 1810-K	58	160093-CO	11	22	4810 NP 05	1T 19 L-7	W01 M58 6338	1 R 14-730	1 D 28 A-10	32918 K		1T19 E2-204676	
MD 14813		58	130036-CO	5,48	22		1T 19 L-11	W01 M58 0918			34813 P		1 T 19E-2 BR	
MD 14813-K		58	160068-CO	11,61	22	4813 N P07	1T 19 F-11	W01 M58 7358	1 R 14-727	1 D 28 B-9	34813-K		1 T 19 E-2 BR	
MD 14838	Voss 232	59	130041-CO	3,5	30	4838 N					34338 P			
MD 14838-K	Voss 232	59	160077-CO	8,54	25	4838 N P21					34838 K01			
MD 14881		59	130037-CO	6,31	20	4881 N P02	1T 66 F-7.0	W01 M58 8601	1 R 14-701		34881 P			
MD 14881-K		60	160069-CO	15,62	20		1T 66 D-7.0	W01 M58 8602	1 R 14-724	1 DK 32 K	34881 K01			D14837
MD 14881-KP	Composite piston	60	160070-CO	12,42	20		1T 66 D-7.0	W01 M58 8606	1 R 14-757	1 DK 32 K	34881 KP			
MD 14881-KP01	180 ° axial difference according to MD 14881-KP	60	160174-CO	12,42	20						34881 KP01			D14888
MD 14881-K01	180 ° axial difference according to MD 14881-K	61	160170-CO	12,42	20		1T 66 D-7.0	W01 M58 8602	1 R 14-724	1 DK 32 K	34881 K			
MD 14882		61	130059-CO	4,8	30	4882 N1 P01			1 R 10-702		34882 P			
MD 14882-K		61	160102-CO	6,8	30	4882 N1 P05					34882 K			
MD 14882-KP	Composite piston	62	160103-CO	5,3	30									
MD 14883		62	130060-CO	4,75	30	4883 N1 P01			1 R 11-804		34883 P			
MD 14883-K		62	160127-CO	6,7	25	4883 N1 P07					34883 K			
MD 14884		63	130066-CO	4,75	30	4884 N1 P01			1 R 11-820		34884 P			
MD 14884-K		63	160104-CO	9,8	25	4884 N1 P06					34884 K			
MD 14884-KP	Composite piston	63	160105-CO	5,2	30	4884 N1 P06								
MD 14911		64	130038-CO	6,62	22				1 R 13-715		34911 P			
MD 14911-K		64	160071-CO	13,42	22	4911 N P03					34911 K			
MD 1912-K		64	160203-CO	12,54	22	80x120x80	912 N P02	1T19L-14	W01 M58 8766	1D28D2	1R14-758	1T 19 E-4	9212 K	
MD 14912		65	130039-CO	6,84	22	4912 N P08			1 R 13-713		34912 P			
MD 14912-K		65	160073-CO	14	22	4912 N P05	1T 19 L-14	W01 M58 8786	1 R 13-738		34912 K		1 T 19 E-4 206779	
MD 1912-K02		65	160204-CO	14,8	22	80x120x80	912 N P01						32926 K	
MD 14913		66	130040-CO	6,46	22	4913 N P04	1T 19 L-14	W01 095 0365	1 R 14-755	1 D 28 H-16 NP.	34913 P			
MD 14913-K		66	160075-CO	13	22	4913 N P02	1T 19 F-14	W01 095 0366	1 R 14-753	1 D 28 H-16	34913 K		1 T 19 E-9.3 206201	
MD 14925-K		66	160124-CO	8,1	30	6609 N P01					34925 P			

CONNECT REF.	REMARKS	PAGE	System ID	weight(kg)	QIP(pcs)	CONTITECH	FIRESTONE		GOODYEAR	PHOENIX	AIRTECH	AIRKRAFT	CF GOMMA	DUNLOP
MD 14940		67	130063-CO	4,85	30	4940 N P02			1 R 11-799		34940 P			
MD 14940-K		67	160098-CO	12,3	30						34940 K			
MD 14941		67	130062-CO	4,97	30	4941 N P02			1 R 11-802		34941 P			
MD 14941-K		68	160097-CO	12,3	30						34941 K			
MD 14960		68	130064-CO	4,89	30	4960 N P02			1 R 11-801		34960 P			
MD 14960-K		68	160099-CO	11,4	30						34960 K			
MD 14960-KP	Composite piston	69	160100-CO	8,6	30						34960 KPP			
MD 14961		69	130065-CO	4,96	30	4961 N P02			1 R 11-800		34961 P			
MD 14961-K		69	160101-CO	11,4	30						34961 KPP			
MD 16199-K		70	160120-CO	10	25				1 R 13-744		36199 K			
MD 16200-K		70	160126-CO	10	25				1 R 13-745		36200 K			
MD 163007-KP		70	160121-CO	8	20		1T 15 LUX-11	W01 M58 8948						
MD 16416		71	130067-CO	2,1	30						36416 P			
MD 16416-K		71	160081-CO	5,14	30	6608 N P01					36416 K			
MD 16418		71	130068-CO	2,35	30						36418 P			
MD 16418-K		72	160082-CO	5,62	30	6607 N P01					36418 K			
MD 16604-K		72	160128-CO	5,62	30	6604 N P01					36108 K			
MD 17315-KP		72	160113-CO	7,8	20		1T 15 LUX-11	W01 M58 7315						
MD 17783-K	* for this reference please contact sales dept.	73	160089-CO	7,1	30									
MD 17803		73	130069-CO	3,55	30						37803 P			
MD 17803-K		73	160087-CO	6,44	30	6605 N01					37803 K			
MD 17804		74	130070-CO	3,15	30						37804 K			
MD 17804-K		74	160083-CO	6,16	30	6601 N01					37804 K			
MD 18185-KP		74	160137-CO	6,8	25		1T 15 MPW 9	W01 M58 8185	1 R 11-764		38185 K			
MD 18683-K		75	160092-CO	8	30		1T 15 LNR 3	W01 M58 8683			38683 K			
MD 191209-K		75	160139-CO	9,5	30		1T 15 M 9	W01 M58 6289	1 R 12-703	1 D 23 E-3	391209 K		1 T 323-40	
MD 191210-K		75	160140-CO	9,5	30				1 R 12-720		391210 K		1 T 323-40	
MD 191305-K		76	160148-CO	9,5	30				1 R 13-730		391305 K			
MD 191318-K		76	160150-CO	12,65	22		1T 19 L-11	W01 M58 6361	1 R 14-706		391318 K		1 T 19E-2	
MD 12144-K	* for this reference please contact sales dept.	76	160152-CO	9,5	30									
MD 192621-KP	composite long piston type of MD 14022-KP05	77	160135-CO	7,3	25									
MD 196251-KP		77	160111-CO	9	30		1T 15 LP-3	W01 M58 6251			36251-K			
MD 196315-KP	Composite piston	77	160112-CO	9	30		1T 15 MPW 9	W01 M58 6315	1 R 11-772	1 DK 20 A-51	39002-A3-01KPP			
MD 197502-K		78	160151-CO	16,2	20		1T 19 L-11	W01 M58 7502	1 R 14-709					
MD 198608-KP		78	160134-CO	9	30		1T 17 DJ-7	W01 M58 8608			38608 KPP			
MD 198643-K		78	160136-CO	13	25		1T 17 CL-9.5	W01 M58 8643	1 R 13-167					
MD 1724		79	130079-CO	4,4	30	724 N P01			1 R 11-711		3724 P			
MD 1810-K03		79	160208-CO	10,5	22				1 DK 28 A11					
MD 1813-K03		79	160179-CO	11,88	22		1T19F-11	W01 M58 6359			1T19 E-2	3813 03 K		
MD 196318-KP		80	160202-CO	7,1	22		1T15MPW-9	W01 M58 6318				36318 K		
MD 197308-KP		80	160193-CO	7,52	30			W01 M58 7308		1R12-713				
MD 10081-KP		80	160186-CO	12	25		1T 17 B-11	W01 M58 8747		1 R 13-150		30081 K		
MD 14154		81	130020-CO	3,84	30	4154 NP 01						34154-01		
MD 14154-KP		81	160131-CO	6,9	25							34154 KPP		
MD 14154-KP05	Composite piston	81	160168-CO	6,9	25	4154 N P05			1 DK 23 F-1					
MD 14159-14	* for this reference please contact sales dept.	82	130091-CO	5,5	30		1T 15 MPW-9	W01 M58 6287						
MD 14159-KP16		82	160178-CO	7,5	25					1 R 12-713				
MD 14183-K02		82	160192-CO	11,5	25	4183 NP 24								
MD 14391-K02		83	160207-CO	6,4	30	4391 N P02								
MD 14543-K		83	160189-CO	9,8	25									
MD 14737	Voss 232	83	130035-CO	6,1		4737 N						34737-01 P		
MD 14737-K01		84	160167-CO	8,4		4737 N P21						34737-01K		
MD 14759-K		84	160205-CO	6,6	25	4759 N P01						34759 K		
MD 14810-K11		84	160211-CO	11	22									
MD 14912-01		85	130098-CO	6,8	22									
MD 14912-K01		85	160210-CO	13,7	20	4912 NP 10								
MD 14915-K		85	160209-CO	10,44	30	4915 NP 06			1 DK 19-1			34915 01 K		
MD 14915-KP		86	160190-CO	9,5	30	4915 NP 06			1 DK 19-1			34915 01 K		
MD 14941-KP		86	160194-CO	9,4	30							34941 K		
MD 16420-K	* for this reference please contact sales dept.	86	160088-CO	6,95	30									
MD 16420-K01		87	160201-CO	6,95	30									
MD 19285-K		87	160206-CO	15,1	22				1 D 28 F-5					
MD 191210-K01		87	160180-CO	9,5	25						1T 323-40 BG	391210 01 K		
MD 191318-K01	180 0 axial difference according to MD 191318-K	88	160181-CO	12,65	22							391318-K01		
MD 191319-K		88	160184-CO	9,5	30		1T 19 L-11	W01 M58 6364			1T 19 E-2	391319-K		
MD 191320-K		88	160182-CO	11,98	22		1T19L-7	W01 M58 6345	1 D 28 A-2	1R14-716	1T 19E-1	391320 K		
D 220		89	130050-CO	2,93	50	FD 200-19 1/4	20CT	W01 M58 6887	2 B 9-223			113001	20 206797	

CONNECT REF.	REMARKS	PAGE	System ID	weight(kg)	QIP(pcs)	CONTITECH	FIRESTONE		GOODYEAR	PHOENIX	AIRTECH	AIRKRAFT	CF GOMMA	DUNLOP
D 220-01	* for this reference please contact sales dept.	89	130051-CO	2,93	50		20CT	W01 M58 6891	2 B 9-287			113011	20 L 207065	
D 220-03	* for this reference please contact sales dept.	89	130052-CO	2,93	50							113015		
D 220-04	* for this reference please contact sales dept.	90	130053-CO	2,93	50							113003		
D 220-05	* for this reference please contact sales dept.	90	130054-CO	2,93	50					SP 2 B 12 R 1/4 M10		113021		
D 220-06	* for this reference please contact sales dept.	90	*	11,8	22									
D 220-07	* for this reference please contact sales dept.	91	*	6,6	20									
D 220-08	* for this reference please contact sales dept.	91	130056-CO	2,93	50							113002		
D 220-09	* for this reference please contact sales dept.	91	130057-CO	7	30	FD 200-22						113473		
D 220-10	* for this reference please contact sales dept.	92												
D 300	* for this reference please contact sales dept.	92	130044-CO	5,69	40									
D 300-01	* for this reference please contact sales dept.	92	130045-CO	5,67	40		22C	W01 M58 6851	2 B 12-327			113312		
D 300-02	* for this reference please contact sales dept.	93	130046-CO	5,67	40		22C	W01 M58 6875				113342		
D 300-03	* for this reference please contact sales dept.	93	*	7	30							113333		
D 300-04	* for this reference please contact sales dept.	93	130047-CO	5,67	40	FD 330-23	22C	W01 M58 6381	2 B 12-425			113307		
D 300-05	* for this reference please contact sales dept.	94	*	7	30							113308		
D 300-06	* for this reference please contact sales dept.	94	*	7	30							113309		
D 300-07	* for this reference please contact sales dept.	94	*	7	30							113310		
D 300-08	* for this reference please contact sales dept.	95	*	7	30				SP 2 B 22R			113312		
D 300-09	* for this reference please contact sales dept.	95	*	7	30				SP 2 B 22R			113313		
D 300-10	* for this reference please contact sales dept.	95	*	7	30				SP 12 RA2			113320		
D 370	* for this reference please contact sales dept.	96												
D 370-01	* for this reference please contact sales dept.	96												
T 300	* for this reference please contact sales dept.	96	130058-CO	7,76	35									
199082-CP	Imperial application	97	160144-CO	10	30	9 10-16 P 310	1T 15 M-6	W01 358 9082	1 R 12-092		34156 05 KPP			
199082-CS	Imperial application	97	160145-CO	10	30	9 10-16 P 310	1T 15 M-6	W01 358 9082	1 R 12-092	1 DK 23 K-9082	34156 05 KPP			
199122-CS	Imperial application	97	160118-CO	11,65	22	11 10.5-21 A 313	1T 19 F-11/1T 19 L-11	W01 3589122	1 R 13-038	1 D 28 C-9122	3813 K05			
199122-CP	Imperial application	98	160117-CO	9	22	11 10.5-21 A 313	1T 19 F-11/1T 19 L-11	W01 3589122	1 R 13-038		3813 K05			
199270-CS	Imperial application	98	160160-CO	11	30	9 10-13.5 S 433	1T 15 VP-4	W01 358 9270	1 R 13-119		39270 K			
198050-CS	Imperial application	98	160158-CO	14,5	30	11 10.5C-16 P 320	1T 19 ZK-5.7	W01 358 8050	1 R 14-039		38050 K			
199580-CS	Imperial application	99	160153-CO	14	30	10 10-21 P 434	1T 17 CL-9,5	W01 358 9580	1 R 13-118		30081 01 K			
199156-CP	Imperial application	99	160110-CO	9	22	11 10.5-21 A 370	1T 19 F-11 / 1T 19 L-11	W01 358 9156	1 R 14-019					
199156-CS	Imperial application	99	160109-CO	11,65	22	11 10.5-21 A 370	1T 19 F-11 / 1T 19 L-11	W01 358 9156	1 R 14-019					
199580-CP	Imperial application	100	160199-CO	11	30	9 10-14 P 383	1T 19 ZK-5.7	W01 358 9580	1 R 12-281					
199069-CP	Imperial application	101	*	6,5	30	9 10-14 P 312	1T 15 M-4	W01 358 9069	1 R 12-256		39069 K			
199321-CP	Imperial application	101	160107-CO	9	22	9 10-21 P 361	1T 115-11	W01 358 9321	1 R 12-256		39321 K			
199321-CS	Imperial application	101	160108-CO	11	22	9 10-21 P 361	1T 115-11	W01 358 9321	1 R 12-256		39321 K			
199265-CS	Imperial application	102	160159-CO	13	30	9 10-19 P 435	1T 15MH-9	W01 358 9265	1 R 12-375		39265 K			
199394-CP	Imperial application	102	*	8,5	30	9 10-14 P 383	1T 15 M-9	W01 358 9394	1 R 12-281					
199921-CP	Imperial application	102	*	7,8	30	9 10-17.5 P 443	1T 15 M-11	W01 358 9321	1 R 12-256					
198755-CS	Imperial application	103	160156-CO	11	30	10 10-15 S 522	1T 17 B-5	W01 358 8755	1 R 13-124					
199367-CS	Imperial application	103	160116-CO	8,6	22	9 10-21 P 505	1T 15 M-11	W01 358 9367	1 R 12-256					
199640-CS	Imperial application	103	160157-CO	10	30	9 10-12 A 427	1T 15 MT-3	W01 358 9640	1 R 12-367					
199367-CP	Imperial application	104	160115-CO	11,2	22	9 10-21 P 505	1T 15 M-11	W01 358 9367	1 R 12-256					
199780-CALU	Imperial application	104	160123-CO	8	20	9 10S-16 A 382	1T 15 ZR-6	W01 358 9780	1 R 12-303		32303 K			
199780-CP	Imperial application	104	160122-CO	6,6	20	9 10S-16 A 382	1T 15 ZR-6	W01 358 9780	1 R 12-303	1 DK 23 K-9780	32303 K			
198204-CS	Imperial application	105	*	7	30	9 10-12 P 484	1T 15 M-2	W01 358 8204	1 R 12-522					
198729-CS	Imperial application	105	*	9,7	30	10 10B-13 S 513	1T 17 BB-2	W01 358 8729	1 R 13-130					
188944-CP	Imperial application	105	*	9	30	9 10-17.5 P436	1T 15 MLW-7	W01 358 8944	1 R 12-366					
198091-CS	Imperial application	106	160154-CO	15	22	11 10.15A-16 P 523	1T 19 FC-6/ 1T 19 LC-6	W01 358 8091	1 R 14-171					
198709-CS	Imperial application	106	160155-CO	14	22	10 10.5-15 P 460	1T 17 CA-5	W01 358 8709	1 R 13-159					
199370-CP	Imperial application	106	160149-CO	9	22	9 10-21 P 448	1T 15 M-11	W01 358 9370	1 R 12-440					
199101-CP	Imperial application	107	160142-CO	9	22	9 10-19 P 315	1T 15 M-9	W01 358 9101	1 R 12-103		34159 07 KPP 1T 323-40			
199101-CS	Imperial application	107	160143-CO	11	22	9 10-19 P 315	1T 15 M-9	W01 358 9101	1 R 12-103	1 DK 23 L-9101	34159 07 KPP		1T 323-40	
199121-CS	Imperial application	107	160147-CO	10	22	11 10.5-17 A 317	1T 19 F-7/1T 19L-7	W01 358 9121	1 R 12-039	1 D 28 G-9121	39121 K			
199121-CP	Imperial application	108	160146-CO	8	22	11 10.5-17 A 317	1T 19 F-7/1T 19L-7	W01 358 9121	1 R 12-039		39121 K			
199243-CP	Imperial application	108	*	7,5	30	9 10-19 P 384	1T 15 M-9	W01 358 9243	1 R 12-480					
199366-CS	Imperial application	108	*	10,5	30	9 10-12 A 488	1T 15 M-2	W01 358 9366	1 R 12-487					
C 196890	Imperial application	109	*	7	30	FD 200-19 539	20F	W01 358 6908	2 B 9-210					
C 196900	Imperial application	109	130088-CO	2,93	50	FD 200-19 319	20CT	W01 358 6900						
C 196910	Imperial application	109	130081-CO	2,93	50	FD 200-19 320	20CT	W01 358 6910	2 B 9-200		113017			
C 196856	Imperial application	110	*	7	30	FD 200-19 499	20F	W01 358 6856						
C 196884	Imperial application	110	*	7	30	FD 200-19 724	20F	W01 358 6884						
C 196926	Imperial application	110	*	7	30	FD 200-19 504	20CT	W01 358 6926						
C 196897	Imperial application	111	*	7	30	FD 200-19 505	20F	W01 358 6897	2 B 9-229					
C 196902	Imperial application	111	130084-CO	2,93	50	FD 200-19 310	20F	W01 358 6902	2 B 9-201					
C 196905	Imperial application	111	*	7	30	FD 200-19 315	20F	W01 358 6905	2 B 9-206					
C 196908	Imperial application	112	*	7	30	FD 200-19 362	20F	W01 358 6908						

CONNECT REF.	REMARKS	PAGE	System ID	weight(kg)	QIP(pcs)	CONTITECH	FIRESTONE		GOODYEAR	PHOENIX	AIRTECH	AIRKRAFT	CF GOMMA	DUNLOP
C 196932	Imperial application	112	*	7	30	FD 200-19 452	20F	W01 358 6932	2 B 9-246					
C 196935	Imperial application	112	130232-CO	7	30	FD 200-19 499	20F	W01 358 6935						
C 197400	Imperial application	113	130083-CO	5,69	40	FD 330-22 313	22C	W01 358 7400			113333			
C 197410	Imperial application	113	130075-CO	5,69	40	FD 330-22 331	22C	W01 358 7410			113334			
C 197135	Imperial application	113	130082-CO	9,37	30	FD 530-22 311	21D	W01 358 7135			113454			
C 197784	Imperial application	114	130085-CO	9,37	30		233-2	W01 358 7784	2 B 14-465					
C 197443	Imperial application	114	130092-CO	5,69	30	FD 330-30 323	22C	W01 358 7443			113311			
C 197897	Imperial application	114	130093-CO											
198091-CP	Imperial application	*	160198-CO	11	22	11 10.15A-16 P 523	1T 19 FC-6/ 1T 19 LC-6	W01 358 8091	1 R 14-171					
198709-CP	Imperial application	*	160197-CO	11	22	10 10.5-15 P 460	1T 17 CA-5	W01 358 8709	1 R 13-159					
199265-CP	Imperial application	*	160196-CO	11	30	9 10-19 P 435	1T 15 MM-9	W01 358 9265	1 R 12-375					
C 197403	Imperial application	*	*	7	30	FD 330-22 318	22C	W01 358 7403			113339			
M 49-8	* for this reference please contact sales dept.	*	100045-PA	1,65	50									
MD 11813-K		*	160129-CO	13,05	25	912 NP 02	1T 19 L-14	W01 M58 7385/8766		1 D 28 D-2	391314-K		1T 19E-4	D13B03
MD 11813-K02		*	160130-CO	13,05	25	912 NP 01					32926-K			
MD 14159-16	* for this reference please contact sales dept.	*	130089-CO	5,5	30		1T 15 M-9	W01 M58 7308						
MD 18683-K		*	160092-CO	8	30		1T 15 LNR 3	W01 M58 8683			38683 K			
MD 199048-KP		*	160119-CO	9	30		1T 15 SN-6	W01 M58 9048						
162290-CS	Imperial application	*	160188-CO						1 R 12-290					

AIR EXPERT®

Original Equipment Cross Reference List

ACERBI				
	CONNECT REF.	REMARKS	PAGE	SYSTEM ID
441901	MD 196315-KP	Composite piston	77	160112-CO
887 MK1	MD 1887-K		29	160094-CO

AUWARTER				
	CONNECT REF.	REMARKS	PAGE	SYSTEM ID
B 510040	M 1701		2	100005-CO

BARTOLETTI				
	CONNECT REF.	REMARKS	PAGE	SYSTEM ID
91619005	MD 1813-K		24	160013-CO
91619005	MD 191319-K		88	160184-CO
91619011	MD 191318-K		76	160150-CO

BATTAGLINO				
	CONNECT REF.	REMARKS	PAGE	SYSTEM ID
211400	MD 1813-K		24	160013-CO
2211400	MD 191319-K		88	160184-CO
2211401	MD 191318-K		76	160150-CO

BMC				
	CONNECT REF.	REMARKS	PAGE	NETSIS
Pro Çekici 8277 HF	162290 CS	Imperial application	*	160188-CO

BERTOJA				
	CONNECT REF.	REMARKS	PAGE	SYSTEM ID
45402001	M 1673		2	100004-CO
45402002	MD 1810-K		20	160004-CO

BPW				
	CONNECT REF.	REMARKS	PAGE	SYSTEM ID
627584	M 1673		2	100004-CO
02.200.24.00.0	M 1719		4	100010-CO
02.2002.41.00	M 1720		4	100011-CO
02.2002.44.00	M 1644		1	100001-CO
02.2002.46.00	M 1662		1	100003-CO
05.429.40.0.10	MD 1881		27	130012-CO
05.429.40.03.0	MD 1941		32	130014-CO
05.429.40.05.0	MD 1942		34	130015-CO
05.429.40.08.1	MD 1881-KP		28	160021-CO
05.429.40.28.1	MD 1941-K		33	160025-CO
05.429.40.91.0	MD 1940		31	130013-CO,
05.429.41.22.1	MD 14881-K01	180 0 axial difference according to MD 1881-KP	61	160170-CO
05.429.41.22.1	MD 14881-KP	Composite piston	60	160070-CO
05.429.41.25.0	MD 14941		67	130062-CO
05.429.41.56.0	MD 14940		67	130063-CO
05.429.41.56.0	MD 14940-K		67	160098-CO
05.429.41.69.0	MD 1942-K		34	160027-CO
05.429.41.77.0	MD 14960		68	130064-CO
05.429.42.04.0	MD 14961		69	130065-CO
05.429.42.41.1	MD 1940-K		31	160023-CO
05.429.42.41.1	MD 1940-K01	180 ^{0} axial difference according to MD 1940-K	32	160171-CO
05.429.43.20.0	MD 1941-KP		33	160026-CO
05.429.43.21.0	MD 1940-KP		31	160024-CO
05.429.43.21.0	MD 1940-KP01	180 ^{0} axial difference according to MD 1940-KP	32	160175-CO
05.429.43.41.0	MD 14881-KP01	180 ^{0} axial difference according to MD 14881-KP	60	160174-CO
05.429.43.51.0	MD 1881-K01	180 ^{0} axial difference according to MD 1881-K	28	160169-CO
05.429.43.51.0	MD 1881-KP01	180 ^{0} axial difference according to MD 1881-KP	29	160173-CO
09.429.38.02.0	M 1762			100017-CO
BPW(36K)05.429.41.01.0	MD 14881		59	130037-CO

BUSSING				
	CONNECT REF.	REMARKS	PAGE	SYSTEM ID
831120144	M 1661		1	100002-CO
536905265/6	M 1644		1	100001-CO

CARDI				
	CONNECT REF.	REMARKS	PAGE	SYSTEM ID
58050700	MD 191318-K		76	160150-CO
58050900	MD 191209-K		75	160139-CO
58051000	MD 1813-K		24	160013-CO
58051000	MD 191319-K		88	160184-CO

CHEREAU				
	CONNECT REF.	REMARKS	PAGE	SYSTEM ID
VSR U5 00211F	M 1737		5	100014-CO

DAF				
	CONNECT REF.	REMARKS	PAGE	SYSTEM ID
039022	MD 18683-K		75	160092-CO
67306	MD 191318-K		76	160150-CO
377498	MD 1836-04		26	130011-CO
377498	MD 1836-K04		27	160017-CO
388165	MD 1836-K01		25	160015-CO
388167	MD 1836-K02		26	160016-CO
388491	MD 1813-K		24	160013-CO
513983	MD 1887-K		29	160094-CO
526651	199069-CP	Imperial application	101	
526651	MD 1836-K06		27	160018-CO
578361	M 1662		1	100003-CO
627584	M 1673		2	100004-CO
627584	M 1944		14	100035-CO
638148	M 1727		4	100012-CO
644425	M 1762			100017-CO
659561	M 1715		3	100008-CO
689677	M 1644		1	100001-CO
818225	M 1719		4	100010-CO
1141525	MD 1887-K06		30	160095-CO
1279141	MD 1889-K		30	160133 CH
0 067 504	MD 1836-01		25	130009-CO
0 513 982	MD 1836-02		26	130010-CO
0 513 983	MD 1887		29	130071-CO
0067306-526823	MD 1811-03		22	130006-CO

DAIMLER C				
	CONNECT REF.	REMARKS	PAGE	SYSTEM ID
A 000 328 01 01	M 1819		9	100024-CO
A 318 328 00 01	M 1746		5	100015-CO
A 363 328 00 01	M 1715		3	100008-CO
A 363 328 01 01	M 1757			100016-CO
A 383 327 00 01	M 1673		2	100004-CO
A 387 28 01 01	M 1720		4	100011-CO
A 393 328 01 01	M 1737		5	100014-CO
A 655 327 00 01	M 11720		15	
A 658 328 00 01	M 1884		11	100028-CO
A 674 328 00 01	M 1838		9	100025-CO
A 674 328 01 01	M 1873		9	
A 699 328 01 01	M 1882		10	100026-CO
A 942 320 01 17	MD 14757-K	Voss 232	57	160078-CO
A 942 320 01 21	MD 14390-K01	Voss 232	53	160062-CO
A 942 320 02 17	MD 14757-K09	Voss 232	57	160079-CO
A 942 320 02 21	MD 14390-K02	Voss 232	54	160063-CO
A 942 320 22 21	MD 14183	Voss 232	52	130087-CO
A 942 320 22 21	MD 14183-K	Voss 232	52	160125-CO
A 942 327 00 01	MD 14757	Voss 232	56	130042-CO
A 942 328 00 01	MD 14390-01	Voss 232	53	130032-CO
A 942 328 01 01	MD 14390-02	Voss 232	53	130033-CO
A 946 320 03 21	MD 14737	Voss 232	83	130035-CO
A 946 320 05 21	MD 14737-K02	Voss 232	56	160066-CO
A 946 320 05 21	MD 14737-K01		84	160167-CO
A 946 320 38 21	MD 14838-K	Voss 232	59	160077-CO
A 946 328 00 01	MD 14838	Voss 232	59	130041-CO
A 974 328 00 01	MD 14757-09	Voss 232	57	130043-CO

DENNIS				
	CONNECT REF.	REMARKS	PAGE	SYSTEM ID
611896/12	M 1927		12	100032-CO
650292/8	M 1720		4	100011-CO
656 300 / 2	M 1896		11	100029-CO

E.R.F.				
	CONNECT REF.	REMARKS	PAGE	SYSTEM ID
143908-3	MD 1813-K		24	160013-CO
EVO-BUS				
	CONNECT REF.	REMARKS	PAGE	SYSTEM ID
4731012000	M 1661		1	100002-CO
4731013000	M 1762			100017-CO
4731029000	MD 1811-03		22	130006-CO
4731030000	MD 1813-K		24	160013-CO
4731032000	M 1719		4	100010-CO
A 000 328 0001	M 1921		12	*
A 000.327.0101	M 1644		1	100001-CO
A 356 327 0001	M 145025		18	*
A 629 320 00 25	MD 14644	Voss 232	55	130077-CO
A 699 328 01 01	M 1975		14	100048-CO
A 942.327.0001	MD 14390-01	Voss 232	53	130032-CO
U 383.327.0001	M 1673		2	100004-CO
FRUEHAUF				
	CONNECT REF.	REMARKS	PAGE	SYSTEM ID
1371	D 220		89	130050-CO
78580	MD 14157-04	* for this reference please contact sales dept.	43	130026-CO
431487	MD 14420-K		54	160096-CO
513983	MD 1887		29	130071-CO
003615E	MD 1813-K		24	160013-CO
M060770	MD 11813-K		*	160129-CO
M078580	MD 14157-KP08		47	160051-CO
UCD-9393-2	199394-CP	Imperial application	102	*
UCD-9393-2	199580-CP	Imperial application	100	160199-CO *
UJA-0894-001	MD 14159-KP	Composite piston	50	160055-CO
UJB 0358-001	MD 14159		50	130030-CO
UJB 0358-001	MD 14159-KP09	Composite piston with middle assembly type	52	160058-CO
UJB 0975/M060	MD 196315-KP	Composite piston	77	160112-CO
UJB0207-001	MD 14156-K05		42	160041-CO
GIGANT				
	CONNECT REF.	REMARKS	PAGE	SYSTEM ID
166217	MD 1725-K02		19	160002-CO
166252	MD 1725-K03	Middle bolt assembling at bottom	19	160001-CO
246169	MD 1724		79	130079-CO
246169	MD 1724-K		19	160187-CO
161210/209/196035	M 1762			100017-CO
166226/196043	M 1727		4	100012-CO
196036 / 166205	M 1719		4	100010-CO
A 942 320 01 21	MD 14390-K01	Voss 232	53	160062-CO
A 942 320 02 21	MD 14390-K02	Voss 232	54	160063-CO
A 942 320 22 21	MD 14183-K	Voss 232	52	160125-CO
A 946 320 04 21	MD 14813-K		58	160068-CO
S8768	MD 199048-KP			160119-CO
GRANNING				
	CONNECT REF.	REMARKS	PAGE	SYSTEM ID
1371	C 196910	Imperial application	109	130081-CO
15619	MD 196251-KP		77	160111-CO
15621	M 1661		1	100002-CO
15622	M 1644		1	100001-CO
15623	M 1662		1	100003-CO
15634	MD 1813-K		24	160013-CO
15635	MD 1810-K		20	160004-CO
15646	D 300-04	* for this reference please contact sales dept.	93	130047-CO
15709	MD 1902-K		30	160106-CO
15732	MD 14157-15	* for this reference please contact sales dept.	46	130061-CO
15910	MD 14912-K		65	160073-CO

1359/2727/1528	199082-CP	Imperial application	97	160144-CO
1359/2727/1528	199082-CS	Imperial application	97	160145-CO
1371/15603	D 220		89	130050-CO
702932-11	C 196856	Imperial application	110	*

HENDRICKSON				
	CONNECT REF.	REMARKS	PAGE	SYSTEM ID
15646	D 300-08	* for this reference please contact sales dept.	95	*
100053	MD 14156-KP88		43	160040-CO
A 06030604	D 220-08	* for this reference please contact sales dept.	91	130056-CO
B 2063/Y505859/01	MD 1813-K		24	160013-CO
B 2065/Y506243/Y506201	MD 1810-K		20	160004-CO
B 6195	MD 191209-K		75	160139-CO
B02066	199082-CP	Imperial application	97	160144-CO
B02066	199082-CS	Imperial application	97	160145-CO
B-3411	199121-CS	Imperial application	107	160147-CO
B-3411	199121-CP	Imperial application	108	160146-CO
C20010 /C20108	199270-CS	Imperial application	98	160160-CO
HS 251087	MD 10081-K		35	160086-CO
HS507907/P	D 220-03	* for this reference please contact sales dept.	89	130052-CO
NA 1816	D 300-04	* for this reference please contact sales dept.	93	130047-CO
NA 1827	D 220		89	130050-CO
NS501304	199069-CP	Imperial application	101	*
NS501304	199921-CP	Imperial application	102	*
S142249	199367-CS	Imperial application	103	160116-CO
S142249	199367-CP	Imperial application	104	160115-CO
S20124/HT205T C20413/C20124	199265-CS	Imperial application	102	160159-CO
S20127/HSS0600	199580-CS	Imperial application	99	160153-CO
S20217	198944-CP	Imperial application	105	*
S20223/HT-190T HS190T	199640-CS	Imperial application	103	160157-CO
S20901/S21784	198091-CS	Imperial application	106	160154-CO
S20901/S21784	198091-CP	Imperial application	*	160198-CO
S21800/AA230	198709-CS	Imperial application	106	160155-CO
S21800/AA230	198709-CP	Imperial application	*	160197-CO
S22046 / C21624	198755-CS	Imperial application	103	160156-CO
S4771 12514-013	198050-CS	Imperial application	98	160158-CO
S7128	199156-CP	Imperial application	99	160110-CO
S7128	199156-CS	Imperial application	99	160109-CO
S8768	C 196910	Imperial application	109	130081-CO
Y507782	MD 11813-K		*	160129-CO

HANOMAG-HENSCHEL				
	CONNECT REF.	REMARKS	PAGE	SYSTEM ID
536905265	M 1644		1	100001-CO
546905134	M 1661		1	100002-CO

IKARUS				
	CONNECT REF.	REMARKS	PAGE	SYSTEM ID
B 510040	M 1701		2	100005-CO

INBUS				
	CONNECT REF.	REMARKS	PAGE	SYSTEM ID
4890001	M 1944		14	100035-CO
5001051	M 1943		13	100034-CO

IVECO				
	CONNECT REF.	REMARKS	PAGE	SYSTEM ID
174932	M 1809		8	100022-CO
4456111	M 1715		3	100008-CO
4714025	M 1673		2	100004-CO
4716989	M 1945		14	100036-CO
4746733	M 1661		1	100002-CO
6144040	M 1943		13	100034-CO
6453741	M 1928		13	100033-CO
98478799	M 11885		15	100038-CO
4703904/4703972/93195986	M 1782		7	100020-CO

8188526 Eurotech- 471 4025-472 2525-655 7150-473 8008-471 6989	M 1944		14	100035-CO
8188539 Eurotech-500 301 452 -971 08 363	M 1884		11	100028-CO
931 97 594	M 145025		18	*

LEYLAND				
	CONNECT REF.	REMARKS	PAGE	SYSTEM ID
AAU2542	M 1927		12	100032-CO
AAU2544	M 1928		13	100033-CO

KASSBOHRER				
	CONNECT REF.	REMARKS	PAGE	SYSTEM ID
4731012000	M 1661		1	100002-CO
4731013000	M 1762			100017-CO
4731032000	M 1719		4	100010-CO
4731033000	MD 1813-K		24	160013-CO

KOGEL				
	CONNECT REF.	REMARKS	PAGE	SYSTEM ID
4731032000	M 1719		4	100010-CO

KAISER				
	CONNECT REF.	REMARKS	PAGE	SYSTEM ID
1371	C 196910	Imperial application	109	130081-CO
4848	C 196902	Imperial application	111	130084-CO
702932-01	C 196856	Imperial application	110	*
F 01004307	MD 191305-K		76	160148-CO

LECITRAILER				
	CONNECT REF.	REMARKS	PAGE	SYSTEM ID
SN 21502	MD 197502-K		78	160151-CO

LOADGUARD				
	CONNECT REF.	REMARKS	PAGE	SYSTEM ID
S2630	C 196902	Imperial application	111	130084-CO
S3518/ S5270	C 196905	Imperial application	111	*
S8768	C 196910	Imperial application	109	130081-CO

M.A.N				
	CONNECT REF.	REMARKS	PAGE	SYSTEM ID
8143610127	M 1706		2	100006-CO
81436010017	M 1644		1	100001-CO
81436010022	D 300-03	* for this reference please contact sales dept.	93	*
81.436.010.042	MD 1810		20	130002-CO
81.436.010.053	M 1786		7	100021-CO
81.436.016.002	M 1809		8	100022-CO
81.436.016.019	M 1810		8	*
90.831.120.144	M 1661		1	100002-CO
81.43600.6.035	MD 14884-K		63	160104-CO
81.43600.6.035	MD 14884-KP	Composite piston	63	160105-CO
81.43601.0.151	MD 14882		61	130059-CO
81.43601.0.153	MD 14883		62	130060-CO
81.43601.0033/36/37	M 1720		4	100011-CO
81.43601.0039/40	M 1716		3	100009-CO
81.43601.0049/52	M 1762			100017-CO
81.43601.0056/57/58/76/79/82/84/91 /0114	M 1727		4	100012-CO
81.43601.0065/67/70/92/99	M 1882		10	100026-CO
81.43601.0066/68/69/106/108	M 1884		11	100028-CO
81.43601.0071/72/110/128	M 1883		10	100027-CO
81.43601.0150/0125/0140/0150	M 11885		15	100038-CO
81.43601.0152, 81.43601.0174	MD 14884		63	130066-CO
81.43601.059/60/61/75/78/81/83/90	M 1715		3	100008-CO
81.43601.095/97/0102/105/100/126	M 1916		12	100031-CO
81.43601.6.035	MD 14883-K		62	160127-CO

81.43601.6.036	MD 14882-K		61	160102-CO
81.43601.6.038	MD 14882-KP	Composite piston	62	160103-CO

MAGIRIS-DEUTZ				
	CONNECT REF.	REMARKS	PAGE	SYSTEM ID
2491566	M 1673		2	100004-CO
2498667	M 1661		1	100002-CO
4456111	M 1715		3	100008-CO
536905265	M 1644		1	100001-CO

MENARINI				
	CONNECT REF.	REMARKS	PAGE	SYSTEM ID
178739	M 1737		5	100014-CO
178741	M 1945		14	100036-CO
199196	M 1644		1	100001-CO
252933	M 1769		7	100019-CO
178623-325993	M 1944		14	100035-CO

MERCEDES				
	CONNECT REF.	REMARKS	PAGE	SYSTEM ID
393328	M 1737		5	100014-CO
3.073.280.101	M 1727		4	100012-CO
6553270001	M 11720		15	
000.327.0101	M 1644		1	100001-CO
382.327.71.01	M 1762			100017-CO
382.327.72.01	M 1782		7	100020-CO
A 946 328 04 01 DISCOS	MD 10081-K		35	160086-CO
A 946 328 14 01	MD 14157-KP04		44	160046-CO
A 946 328 14 01	MD 14157-KP14		46	160045-CO
A9463281401	MD 14157-04	* for this reference please contact sales dept.	43	130026-CO
A9463281401	MD 14157-14	* for this reference please contact sales dept.	45	130025-CO
A9463281501	MD 14028		40	130019-CO

METRO-CAMMELL				
	CONNECT REF.	REMARKS	PAGE	SYSTEM ID
X 664 1056	M 1720		4	100011-CO

NAVISTAR				
	CONNECT REF.	REMARKS	PAGE	SYSTEM ID
554773C1	199121-CS	Imperial application	107	160147-CO
554773C1	199121-CP	Imperial application	108	160146-CO

NEOPLAN				
	CONNECT REF.	REMARKS	PAGE	SYSTEM ID
1001 101 00	M 1719		4	100010-CO
1001 12 250	M 1661		1	100002-CO
1001 12 254	M 1644		1	100001-CO
1001 123 00	M 1720		4	100011-CO
1021 003 00	M 1762			100017-CO
AA 10-01-002	M 1662		1	100003-CO

NEWAY				
	CONNECT REF.	REMARKS	PAGE	SYSTEM ID
90557019	199121-CS	Imperial application	107	160147-CO
90557019	199121-CP	Imperial application	108	160146-CO
90557027	199082-CP	Imperial application	97	160144-CO
90557027	199082-CS	Imperial application	97	160145-CO
90557086	MD 191209-K		75	160139-CO
90557112	199243-CP	Imperial application	108	*
90557160	199366-CS	Imperial application	108	*
90557223	198204-CS	Imperial application	105	*
1003589101C	199101-CP	Imperial application	107	160142-CO
1003589101C	199101-CS	Imperial application	107	160143-CO
211 586	MD 1810-K		20	160004-CO
22 282	MD 1813-K		24	160013-CO
905 570 27, 905 570 75	MD 14159-KP	Composite piston	50	160055-CO
905 572 33	MD 14157-KP08		47	160051-CO

905.57.001	D 370	* for this reference please contact sales dept.	96	130048-CO
905.57.075	MD 14156-K		41	160036-CO
M0057000 G	MD 1902-K		30	160106-CO

NEWLITE				
	CONNECT REF.	REMARKS	PAGE	SYSTEM ID
NS 190-16	198944-CP	Imperial application	105	

OMAR				
	CONNECT REF.	REMARKS	PAGE	SYSTEM ID
11804	MD 191318-K		76	160150-CO
11808	MD 191209-K		75	160139-CO
A 629 320 00 25	MD 14644	Voss 232	55	130077-CO
A 942 327 00 01	MD 14390-01	Voss 232	53	130032-CO

PEGASO				
	CONNECT REF.	REMARKS	PAGE	SYSTEM ID
174932	M 1809		8	100022-CO
174933	M 1810		8	
794686	M 1897		11	100030-CO
5316 - 5317	M 1943		13	100034-CO
5522 - 6522	M 1883		10	100027-CO

PETERBILT				
	CONNECT REF.	REMARKS	PAGE	SYSTEM ID
45.98.000.5419.9	D 220-01	* for this reference please contact sales dept.	89	130051-CO

PORTESI				
	CONNECT REF.	REMARKS	PAGE	SYSTEM ID
700 176	M 1944		14	100035-CO

RENAULT V.I				
	CONNECT REF.	REMARKS	PAGE	SYSTEM ID
5000288982	M 1921		12	
5000296816	M 1876		10	100049-CO
5000452939	MD 1810-K		20	160004-CO
5000786901	M 1715		3	100008-CO
5000805284	M 1769		7	100019-CO
5000819370	M 1936		13	
5000954175	M 1768			100018-CO
5000954176	M 1782		7	100020-CO
5001829866	M 1661		1	100002-CO
5.001.832.067	MD 14912		65	130039-CO
5010130925	MD 1813-K		24	160013-CO
5010211724	MD 1902-K		30	160106-CO
5.010.294.307	MD 14912-K		65	160073-CO
5 810 111 355 - 5000 805 998	M 1817		8	
5.010.239.252, 5.010.294.252.B	MD 14154		81	130020-CO
5.010.294.308 .C	MD 14911-K		64	160071-CO

ROLFO				
	CONNECT REF.	REMARKS	PAGE	SYSTEM ID
112322	MD 191209-K		75	160139-CO

R.O.R/MERITOR				
	CONNECT REF.	REMARKS	PAGE	SYSTEM ID
2125762	MD 14156		41	130021-CO
21215633	MD 1813-K		24	160013-CO
21221307	MD 14157-04	* for this reference please contact sales dept.	43	130026-CO
21221307	MD 14157-KP04		44	160046-CO
21221307	MD 14157-KP14		46	160045-CO
21222239	MD 1811		21	130003-CO
21222239	MD 1811-K05	45 ^{0} axial difference according to MD 1811-K	23	160012-CO
21222442	MD 14157-05	* for this reference please contact sales dept.	44	130024-CO
21222442	MD 14157-KP15		46	160044-CO

21222673	MD 11813-K			160129-CO
21226068	D 300-02	* for this reference please contact sales dept.	93	130046-CO
212292214	MD 198608-KP		78	160134-CO
2121 5761	MD 14156-K		41	160036-CO
2121 5761	MD 14156-K05		42	160041-CO
21215632/21208082/17204517	MD 1810-K		20	160004-CO
2122 2442	MD 14157-KP09		47	160049-CO
21221395-21222663	D 220		89	130050-CO

S.A.E				
	CONNECT REF.	REMARKS	PAGE	SYSTEM ID
1387283	D 220-09	* for this reference please contact sales dept.	91	130057-CO
131 9761-138	D 220-08	* for this reference please contact sales dept.	91	130056-CO

S.A.F				
	CONNECT REF.	REMARKS	PAGE	SYSTEM ID
2.228.0002.00 2.229.0002.00	MD 1810-K		20	160004-CO
2.229.0003.00	MD 1813-K		24	160013-CO
2918V	MD 14810-K05	2 bolts type of MD 1810-K	58	160093-CO
3.229.0005.00	MD 14813-K		58	160068-CO
3.229.0007.00	MD 14004-KP	Composite piston	38	160029-CO
3.229.0029.00	MD 14022-KP	Composite piston	39	160031-CO
3.229.0031.00	MD 14023-K		40	160033-CO
3.229.0033.00	MD 14022-KP05	Composite short piston	39	160032-CO
4.229.100.400-4.229.100.500	D 220-01	* for this reference please contact sales dept.	89	130051-CO
4.284.3006.00	MD 14022		38	130017-CO
45.98.00.5419.2	D 220-04	* for this reference please contact sales dept.	90	130053-CO
2621 V	MD 192621-KP	composite long piston type of MD 14022-KP05	77	160135-CO
2918	MD 1810		20	130002-CO
3 229 0005 01/ 0006 01/ 0013 00	MD 11813-K		*	160129-CO
3 229 0005 01/ 0006 01/ 0013 00	MD 11813-K02		*	160130-CO
3 229 0031 00 2923V	MD 14023		39	130018-CO
3.229.0031.00	MD 1811-02		21	130005-CO
4.284.3003.01	MD 14004		37	130016-CO

SAMRO				
	CONNECT REF.	REMARKS	PAGE	SYSTEM ID
2500008	MD 1810-K		20	160004-CO
2500009	MD 1813-K		24	160013-CO
2500425	MD 14159		50	130030-CO
2500915	MD 10081-K		35	160086-CO

SCNAIA-SCANIA.BUSSAR				
	CONNECT REF.	REMARKS	PAGE	SYSTEM ID
411627	M 1896		11	100029-CO
434932	M 1928		13	100033-CO
523229	M 1945		14	100036-CO
1123386	MD 14156-KP16		43	160042-CO
1123386	MD 14157-KP66		49	160052-CO
1347587	162290 CS	Imperial application		160188-CO
1363007	MD 163007-KP		70	160121-CO
1379393	MD 14913			130040-CO
1386199	MD 16199-K		70	160120-CO
1386200	MD 16200-K		70	160126-CO
1440302	MD 10302-K		35	160091-CO
1440304	MD 10304-K		35	160084-CO
1440305	MD 10305-K		36	160138-CO
4890001	M 1943		13	100034-CO

1107674 1314906 255293 255295 298568 325748	MD 14813-K		58	160068-CO
1314903 1402423	MD 196251-KP		77	160111-CO
1314904 1865753	MD 17315-KP		72	160113-CO
1314906 298568 325748 1107674	MD 14813		58	130036-CO
1362143 1389198	MD 12143-K	* for this reference please contact sales dept.	36	160090-CO
1379392 1440294 1543691	MD 14913-K		66	160075-CO
411622 411623 4023105	M 1897		11	100030-CO
434 932	M 1927		12	100032-CO
473868 488264 1434506	MD 14506-K		54	160085-CO
475149 470919 1440307	MD 14810-K05	2 bolts type of MD 1810-K	58	160093-CO
523229	M 1944		14	100035-CO
1314905	MD 14157-16	* for this reference please contact sales dept.	48	130028-CO
1314905	MD 14159-16	* for this reference please contact sales dept.	*	130089-CO
1123386	MD 14156-16		42	130023-CO

SCHMITZ				
	CONNECT REF.	REMARKS	PAGE	SYSTEM ID
750208	M 1661		1	100002-CO
750209	M 1662		1	100003-CO
750212	M 1727		4	100012-CO
750212	M 1728		5	100013-CO
750215	M 1719		4	100010-CO
750999	MD 14158-KP	Composite piston	49	160053-CO
015 323	MD 14028-K		41	160035-CO

T.E.C				
	CONNECT REF.	REMARKS	PAGE	SYSTEM ID
0001	D 220		89	130050-CO
505859/01	MD 1813-K		24	160013-CO
506243/01	MD 1810-K		20	160004-CO

TERBERG				
	CONNECT REF.	REMARKS	PAGE	SYSTEM ID
21071483	MD 1813-K		24	160013-CO

TITAN				
	CONNECT REF.	REMARKS	PAGE	SYSTEM ID
91687700000	MD 1813-K		24	160013-CO

TRAILOR				
	CONNECT REF.	REMARKS	PAGE	SYSTEM ID
0036158E/650234Y	MD 1813-K		24	160013-CO

VIBERTI				
	CONNECT REF.	REMARKS	PAGE	SYSTEM ID
128147102	MD 191318-K		76	160150-CO
128147109	MD 191210-K		75	160140-CO
128147122	MD 1813-K		24	160013-CO

VOLVO				
	CONNECT REF.	REMARKS	PAGE	SYSTEM ID
1075291	M 11421		15	100037-CO
1075363	MD 14718-K		56	160065-CO
1075366	M 11924		16	100040-CO
1076420	MD 16420-K	* for this reference please contact sales dept.	86	160088-CO
1082085	M 1883		10	100027-CO
1134445	M 1644		1	100001-CO
1134446	M 1727		4	100012-CO
1137882	M 1661		1	100002-CO
1611776	M 1673		2	100004-CO
1612455	M 1768			100018-CO
3027271	M 141525		17	100042-CO
3027272	M 141528		17	100043-CO
3111277	M 190453	* for this reference please contact sales dept.	16	*
3116983	M 1928		13	100033-CO
6797169	M 1713		3	100007-CO
6885533	M 1715		3	100008-CO
20452144	MD 192144-K	* for this reference please contact sales dept.		160152-CO
20573108	MD 16604-K		72	160128-CO
1 076 076	MD 14420-K		54	160096-CO
1 076 416	MD 16416		71	130067-CO
1 076 418	MD 16418		71	130068-CO
1 076 594 / 20 554 755	MD 14713-K		55	160064-CO
1 076 595	MD 14713		55	130034-CO
1075290 / 1593842	M 1716		3	100009-CO
1075365 / 1629782 / 20452138 / 20554761	MD 14925-K		66	160124-CO
1590136 / 1629193	M 1720		4	100011-CO
20 427 803	MD 17803		73	130069-CO
20 427 803	MD 17803-K		73	160087-CO
20554772 / 3987783	MD 17783-K	* for this reference please contact sales dept.	73	160089-CO
2058214 / 1076418	MD 16418-K		72	160082-CO
2058215/ 1076416	MD 16416-K		71	160081-CO
20582209 / 3171694	MD 17804		74	130070-CO
20582209 / 3171694	MD 17804-K		74	160083-CO
3116354/AAU 2542	M 1927		12	100032-CO

WEWELER				
	CONNECT REF.	REMARKS	PAGE	SYSTEM ID
21515761	MD 14156-K		41	160036-CO
US 04028	MD 14028-K		41	160035-CO
US 06285	MD 14158-KP	Composite piston	49	160053-CO
US 06287 / US 07364	MD 14157-KP04		44	160046-CO
US 06316	MD 14157-06	* for this reference please contact sales dept.	45	130027-CO
US 06316	MD 14157-KP06		45	160047-CO
US 06910F	D 220		89	130050-CO
US 07074	MD 14157-KP15		46	160044-CO
US 07074	MD 14157-KP09		47	160049-CO
US 07074C / US 07074P	MD 14157-KP05		44	160043-CO
US 07074F	MD 14157-05	* for this reference please contact sales dept.	44	130024-CO
US 87	MD 14157-KP14		46	160045-CO
US 87 EURO F	MD 14157-04	* for this reference please contact sales dept.	43	130026-CO
US06285F	MD 14158		49	130029-CO
US35864F	MD 14156		41	130021-CO
US87408 / US07345	MD 1813-K		24	160013-CO
US874313 / US07337	MD 1810-K		20	160004-CO
USO6287F	MD 14159-14	* for this reference please contact sales dept.	82	130091-CO
USO8840	MD 14157-15	* for this reference please contact sales dept.	46	130061-CO

WARSTEINER				
	CONNECT REF.	REMARKS	PAGE	SYSTEM ID
501	M 1662		1	100003-CO

YORK				
	CONNECT REF.	REMARKS	PAGE	SYSTEM ID
785168	MD 1810-K		20	160004-CO
785170	MD 1813-K		24	160013-CO

WATSON/CHALIN				
	CONNECT REF.	REMARKS	PAGE	SYSTEM ID
0039	198050-CS	Imperial application	98	160158-CO
0054	199366-CS	Imperial application	108	
0057	199370-CP	Imperial application	106	160149-CO
0061	199243-CP	Imperial application	108	
AS 0036	199069-CP	Imperial application	101	
AS-0035	C 196890	Imperial application	109	
AS-0035	C 196908	Imperial application	112	
AS-0084	199270-CS	Imperial application	98	160160-CO

ZORZI				
	CONNECT REF.	REMARKS	PAGE	SYSTEM ID
0039	C 196900	Imperial application	109	130088-CO
1006551	MD 191209-K		75	160139-CO
1006553	MD 191318-K		76	160150-CO
81.43601.0.152	MD 14884		63	130066-CO
AS-0001	C 196910	Imperial application	109	130081-CO
AS-0002	C 196902	Imperial application	111	130084-CO
AS-0020	C 196905	Imperial application	111	
AS-0058	C 196897	Imperial application	111	
AS-0077	C 196856	Imperial application	110	

AIR EXPERT

Connect to Contitech References

CONNECT REF.	CONTITECH	REMARKS	PAGE	System ID
M 1644	644 N		1	100001-CO
M 1661	661 N		1	100002-CO
M 1662	662 N		1	100003-CO
M 1673	673 N		2	100004-CO
M 1701	701 N		2	100005-CO
M 1706	706 N		2	100006-CO
M 1713	713 N		3	100007-CO
M 1715	715 N		3	100008-CO
M 1716	716 N		3	100009-CO
M 1719	719 N		4	100010-CO
M 1720	720 N		4	100011-CO
M 1727	727 N		4	100012-CO
M 1728	728 N		5	100013-CO
M 1737	737 N		5	100014-CO
M 1746	746 N		5	100015-CO
M 1757	757 N		6	100016-CO
M 1762	762 N		6	100017-CO
M 1768	768 N		6	100018-CO
M 1769	769 N			100019-CO
M 1782	782 N			100020-CO
M 1786	786 N			100021-CO
M 1809	809 NTB		8	100022-CO
M 1810	810 NTB		8	
M 1817	817 N		8	
M 1819	819 N		9	100024-CO
M 1838	838 N		9	100025-CO
M 1873	873 N		9	
M 1876	876 N		10	100049-CO
M 1882	882 N1		10	100026-CO
M 1883	883 N1		10	100027-CO
M 1884	884 N		11	100028-CO
M 1896	896 N		11	100029-CO
M 1897	897 N		11	100030-CO
M 1916	916 N1		12	100031-CO
M 1921	921 N		12	
M 1927	927 N		12	100032-CO
M 1928	928 N		13	100033-CO
M 1936	936 N		13	
M 1943	943 N		13	100034-CO
M 1944	944 N		14	100035-CO
M 1945	945 N		14	100036-CO
M 1975	975 N		14	100048-CO
M 11421	1421 N		15	100037-CO
M 11720	1720 N		15	
M 11885	1885 N1		15	100038-CO
M 11888	1888 N		16	100039-CO
M 11924	1924 N1		16	100040-ST
MD 1725-K02	725 N P02		19	160002-CO
MD 1725-K03	725 N P03	Middle bolt assembling at bottom	19	160001-CO
MD 1810-K	810 MB		20	160004-CO
MD 1810-KP	810 MB	Composite piston	20	160005-CO
MD 1810	810 MB/0		20	130002-CO
MD 1811-K03	811 MB		22	160011-CO
MD 1811-03	811 MB/0		22	130006-CO
MD 1811-K16	811 M 16 K1		24	160009-CO
MD 1813-K	813 MB		24	160013-CO
MD 1813	813 MB/0		24	130008-CO
MD 1836-01	836 M		25	130009-CO
MD 1836-K01	836 M K1		25	160015-CO
MD 1836-02	836 M 2		26	130010-CO
MD 1836-K02	836 M2 K1		26	160016-CO
MD 1836-04	836 MB		26	130011-CO
MD 1836-K04	836 MB K4		27	160017-CO
MD 1836-K06	836 MB K6		27	160018-CO
MD 1881	881 MB		27	130012-CO
MD 1887	887 M		29	130071-CO
MD 1887-K	887 MK1		29	160094-CO
MD 1887-K06	887 NP04		30	160095-CO
MD 1889-K	889 MK2		30	160133 CH
MD 1902-K	902 MB		30	160106-CO
MD 1940	940 MB		31	130013-CO
MD 1941	941 MB		32	130014-CO
MD 1942	942 MB		34	130015-CO
MD 14004	4004 N P02		37	130016-CO
MD 14004-KP	4004 NP 03	Composite piston	38	160029-CO
MD 14022	4022 N P02		38	130017-CO
MD 14022-KP05	4022 N P05	Composite short piston	39	160032-CO
MD 14022-KP	4022 NP 03	Composite piston	39	160031-CO
MD 14023	4023 N		39	130018-CO
MD 14023-K	4023 N P03		40	160033-CO
MD 14023-KP	4023 NP 03	Composite piston	40	160034-CO

CONNECT REF.	CONTITECH	REMARKS	PAGE	System ID
MD 14028	4028 N		40	130019-CO
MD 14028-K	4028 N P02		41	160035-CO
MD 14156	4156 N P05		41	130021-CO
MD 14156-K	4156 N P07		41	160036-CO
MD 14156-K05	4156 N P09		42	160041-CO
MD 14156-KP	4156 N P15		42	160037-CO
MD 14157-KP04	4157 N P04		44	160046-CO
MD 14157-KP05	4157 N P05		44	160043-CO
MD 14157-KP06	4157 N P06		45	160047-CO
MD 14157-KP08	4157 N P08		47	160051-CO
MD 14157-KP09	4157 N P09		47	160049-CO
MD 14157-KP10	4157 N P10	Composite piston with middle assembly type	48	160050-CO
MD 14158	4158 N P02		49	130029-CO
MD 14158-KP	4158 NP 03	Composite piston	49	160053-CO
MD 14159-K	4159 N P03		50	160054-CO
MD 14159	4159 N P05		50	130030-CO
MD 14159-KP	4159 NP14	Composite piston	50	160055-CO
MD 14159-K05	4159 NP07		51	160060-CO
MD 14159-KP09	4159 N P09	Composite piston with middle assembly type	52	160058-CO
MD 14183	4183 N2	Voss 232	52	130087-CO
MD 14183-K	4183 NP 23	Voss 232	52	160125-CO
MD 14390-K01	4390 N P21	Voss 232	53	160062-CO
MD 14390-01	4390 N1	Voss 232	53	130032-CO
MD 14390-02	4390 N2	Voss 232	53	130033-CO
MD 14390-K02	4390 N P22	Voss 232	54	160063-CO
MD 14420-K	4420 N P01		54	160096-CO
MD 14644	4644 N	Voss 232	55	130077-CO
MD 14713-K	4713 NP 02		55	160064-CO
MD 14713	4713 NP 04		55	130034-CO
MD 14718-K	4718 N P01		56	160065-CO
MD 14737-K02	4737 NP 02	Voss 232	56	160066-ST
MD 14757	4757 N1	Voss 232	56	130042-CO
MD 14757-09	4757 N2	Voss 232	57	130043-CO
MD 14757-K	4757 NP 01	Voss 232	57	160078-CO
MD 14757-K09	4757 NP 09	Voss 232	57	160079-CO
MD 14810-K05	4810 NP 05	2 bolts type of MD 1810-K	58	160093-CO
MD 14813-K	4813 N P07		58	160068-CO
MD 14838	4838 N	Voss 232	59	130041-CO
MD 14838-K	4838 N P21	Voss 232	59	160077-CO
MD 14881	4881 N P02		59	130037-CO
MD 14882	4882 N1 P01		61	130059-CO
MD 14882-K	4882 N1 P05		61	160102-CO
MD 14883	4883 N1 P01		62	130060-CO
MD 14883-K	4883 N1 P07		62	160127-CO
MD 14884	4884 N1 P01		63	130066-CO
MD 14884-K	4884 N1 P06		63	160104-CO
MD 14884-KP	4884 N1 P06	Composite piston	63	160105-CO
MD 14911-K	4911 N P03		64	160071-CO
MD 14912-K	4912 N P05		65	160073-CO
MD 14912	4912 N P08		65	130039-CO
MD 14913-K	4913 N P02		66	160075-CO
MD 14913	4913 N P04		66	130040-CO
MD 14925-K	6609 N P01		66	160124-CO
MD 14940	4940 N P02		67	130063-CO
MD 14941	4941 N P02		67	130062-CO
MD 14960	4960 N P02		68	130064-CO
MD 14961	4961 N P02		69	130065-CO
MD 16416-K	6608 N P01		71	160081-CO
MD 16604-K	6604 N P01		72	160128-CO
MD 16418-K	6607 N P01		72	160082-CO
MD 17803-K	6605 N01		73	160087-CO
MD 17804-K	6601 N01		74	160083-CO
M 11415	1415 N		18	100023-IC
M 11774	1774 N		18	100044-CO
MD 14154-KP05	4154 N P05	Composite piston	81	160168-CO
MD 14154	4154 NP 01		81	130020-CO
MD 14737	4737 N	Voss 232	83	130035-CO
MD 14737-K01	4737 N P21		84	160167-ST
MD 1724	724 N P01		79	130079-CO
MD 11813-K02	912 NP 01			160130-CO
MD 11813-K	912 NP 02			160129-CO
M 141525	RZ 415-25		17	100042-CO
M 141528	RZ 415-28		17	100043-CO
M 145025	RZ 450-25		18	
D 220	FD 200-19 1/4		89	130050-CO
C 196902	FD 200-19 310	Imperial application	111	130084-CO
C 196905	FD 200-19 315	Imperial application	111	
C 196900	FD 200-19 319	Imperial application	109	130088-CO
C 196910	FD 200-19 320	Imperial application	109	130081-CO
C 196908	FD 200-19 362	Imperial application	112	
C 196932	FD 200-19 452	Imperial application	112	

CONNECT REF.	CONTITECH	REMARKS	PAGE	System ID
C 196856	FD 200-19 499	Imperial application	110	
C 196935	FD 200-19 499	Imperial application	112	
C 196926	FD 200-19 504	Imperial application	110	
C 196897	FD 200-19 505	Imperial application	111	
C 196890	FD 200-19 539	Imperial application	109	
C 196884	FD 200-19 724	Imperial application	110	
D 220-09	FD 200-22	* for this reference please contact sales dept.	91	130057-CO
C 197400	FD 330-22 313	Imperial application	113	130083-CO
C 197403	FD 330-22 318	Imperial application		
C 197410	FD 330-22 331	Imperial application	113	130075-CO
D 300-04	FD 330-23	* for this reference please contact sales dept.	93	130047-CO
C 197443	FD 330-30 323	Imperial application	114	130092-CO
C 197135	FD 530-22 311	Imperial application	113	130082-CO
199640-CS	9 10-12 A 427	Imperial application	103	160157-CO
199366-CS	9 10-12 A 488	Imperial application	108	
198204-CS	9 10-12 P 484	Imperial application	105	
199270-CS	9 10-13.5 S 433	Imperial application	98	160160-CO
199069-CP	9 10-14 P 312	Imperial application	101	
199394-CP	9 10-14 P 383	Imperial application	102	
199580-CP	9 10-14 P 383	Imperial application	100	160199-CO
199082-CP	9 10-16 P 310	Imperial application	97	160144-CO
199082-CS	9 10-16 P 310	Imperial application	97	160145-CO
199921-CP	9 10-17.5 P 443	Imperial application	102	
198944-CP	9 10-17.5 P436	Imperial application	105	
199101-CP	9 10-19 P 315	Imperial application	107	160142-CO
199101-CS	9 10-19 P 315	Imperial application	107	160143-CO
199243-CP	9 10-19 P 384	Imperial application	108	
199265-CS	9 10-19 P 435	Imperial application	102	160159-CO
199265-CP	9 10-19 P 435	Imperial application		160196-CO
199321-CP	9 10-21 P 361	Imperial application	101	160107-CO
199321-CS	9 10-21 P 361	Imperial application	101	160108-CO
199370-CP	9 10-21 P 448	Imperial application	106	160149-CO
199367-CS	9 10-21 P 505	Imperial application	103	160116-CO
199367-CP	9 10-21 P 505	Imperial application	104	160115-CO
199780-CALU	9 10S-16 A 382	Imperial application	104	160123-CO
199780-CP	9 10S-16 A 382	Imperial application	104	160122-CO
198709-CS	10 10.5-15 P 460	Imperial application	106	160155-CO
198709-CP	10 10.5-15 P 460	Imperial application		160197-CO
198755-CS	10 10-15 S 522	Imperial application	103	160156-CO
199580-CS	10 10-21 P 434	Imperial application	99	160153-CO
198729-CS	10 10B-13 S 513	Imperial application	105	
198091-CS	11 10.15A-16 P 523	Imperial application	106	160154-CO
198091-CP	11 10.15A-16 P 523	Imperial application		160198-CO
199121-CS	11 10.5-17 A 317	Imperial application	107	160147-CO
199121-CP	11 10.5-17 A 317	Imperial application	108	160146-CO
199122-CS	11 10.5-21 A 313	Imperial application	97	160118-CO
199122-CP	11 10.5-21 A 313	Imperial application	98	160117-CO
199156-CP	11 10.5-21 A 370	Imperial application	99	160110-CO
199156-CS	11 10.5-21 A 370	Imperial application	99	160109-CO
198050-CS	11 10.5C-16 P 320	Imperial application	98	160158-CO

AIR EXPERT

Connect to Firestone References

CONNECT REF.	FIRESTONE		REMARKS	PAGE	System ID
M 1661	W01 095 0021	1R 1C 390-310		1	100002-CO
M 1945	W01 095 0063	1R 1A 460-290		14	100036-CO
M 1715	W01 095 0087	1R 1C 335-310		3	100008-CO
M 1644	W01 095 0118	1R 1A 390-295		1	100001-CO
M 1716	W01 095 0145	1R 2A 450-305		3	100009-CO
M 1943	W01 095 0189	1R 1A 260-285		13	100034-CO
M 1762	W01 095 0190	1R 2D 390-360		6	100017-CO
M 1727	W01 095 0191	1R 2D 460-360		4	100012-CO
M 1719	W01 095 0192	1R 2D 530-360		4	100010-CO
M 1720	W01 095 0195	1R 2A 460-295		4	100011-CO
M 1782	W01 095 0197	1R 1A 415-285		7	100020-CO
M 1673	W01 095 0198	1R 1A 370-285		2	100004-CO
M 1944	W01 095 0198	1R 1A 370-285		14	100035-CO
M 1701	W01 095 0205	1R 3M 340-340		2	100005-CO
M 1662	W01 095 0207/0030	1R 1D 355-355		1	100003-CO
M 1737	W01 095 0211	1R 2A 480-330			100014-CO
M 1757	W01 095 0212	1R 2A 380-305		6	100016-CO
M 1768	W01 095 0213	1R 2A 380-330		6	100018-CO
M 1921	W01 095 0226	1R 1A 415-260		12	
M 1928	W01 095 0228	1R 1K 380-320 FF		13	100033-CO
M 1897	W01 095 0229	1R 1K 440-320 FF		11	100030-CO
M 1927	W01 095 0244	1R 1J 415-285 FF		12	100032-CO
M 1896	W01 095 0245	1R 1J 520-285 FF		11	100029-CO
MD 14913	W01 095 0365	1T 19 L-14		66	130040-CO
MD 14913-K	W01 095 0366	1T 19 F-14		66	160075-CO
M 141525	W01 095 0381	1R 5P 345-290		17	100042-CO
M 141528	W01 095 0382	1R 5P 410-290		17	100043-CO
M 1728	W01 095 0419	1R 2D 470-360			100013-CO
M 11885	W01 095 0429	1R 2A 445 280		15	100038-CO
M 1975	W01 095 0437	1R 1T 320 195		14	100048-CO
M 190453	W01 095 0453	1R 4U 395 260	* for this reference please contact sales dept.	16	
MD 14156-KP	W01 358 9361	1T 15 M-6		42	160037-CO
MD 14159-KP09	W01 379 9131	1T 15 M-9	Composite piston with middle assembly type	52	160058-CO
MD 14156-KP88	W01 455 6288	1T 15 M-6		43	160040-CO
MD 14157-KP66	W01 M57-7295	1T 15 M6		49	160052-CO
M 1810	W01 M58 0491	1T 19 L-7		8	
MD 14159	W01 M58 0736	1T 15 M-9		50	130030-CO
MD 14022	W01 M58 0756	1T 17 BS-6		38	130017-CO
MD 1836-04	W01 M58 0775	1T 17 AR-4.5		26	130011-CO
MD 1836-01	W01 M58 0776	1T 17 AR-4.5		25	130009-CO
MD 1836-02	W01 M58 0777	1T 17 AR-4.5		26	130010-CO
MD 1887	W01 M58 0780	1T 15 LNR-3		29	130071-CO
MD 14813	W01 M58 0918	1T 19 L-11		58	130036-CO
MD 14004	W01 M58 0919	1T 17 BS-6		37	130016-CO
MD 196251-KP	W01 M58 6251	1T 15 LP-3		77	160111-CO
MD 14158	W01 M58 6257	1T 15 MPW 9		49	130029-CO
MD 14158-KP	W01 M58 6285	1T 15 MPW-9	Composite piston	49	160053-CO
MD 14159-14	W01 M58 6287	1T 15 MPW-9	* for this reference please contact sales dept.	82	130091-CO
MD 191209-K	W01 M58 6289	1T 15 M 9		75	160139-CO
MD 14157-KP14	W01 M58 6297	1T 15 MPW-7		46	160045-CO
MD 196315-KP	W01 M58 6315	1T 15 MPW 9	Composite piston	77	160112-CO
MD 14157-KP18	W01 M58 6317	1T 15 MPW-7		47	
MD 1811-K	W01 M58 6334	1T 19 L-11		21	160008-CO
MD 1811-K03	W01 M58 6334	1T 19 L-11		22	160011-CO
MD 1811-02	W01 M58 6335	1T 19 L-11		21	130005-CO
MD 14810-K05	W01 M58 6338	1T 19 L-7	2 bolts type of MD 1810-K	58	160093-CO
MD 1813-KP	W01 M58 6339	1T 19 L-11	Composite piston	25	160014-CO
MD 1810-K	W01 M58 6345	1T 19 L-7		20	160004-CO
MD 14023-K	W01 M58 6348	1T 19 F-11		40	160033-CO
MD 14023-KP	W01 M58 6348	1T 19 F-11	Composite piston	40	160034-CO
MD 1811-03	W01 M58 6359	1T 19 F-11		22	130006-CO
MD 1811-16	W01 M58 6359	1T 19 F-11		23	130004-CO
MD 1811-K16	W01 M58 6359	1T 19 L-11		24	160009-CO
MD 191318-K	W01 M58 6361	1T 19 L-11		76	160150-CO
MD 191319-K	W01 M58 6364	1T 19 L-11		88	160184-CO
MD 14004-K	W01 M58 6366	1T 17 BS-6		37	160028-CO
MD 14004-KP	W01 M58 6366	1 T 17 BS-6	Composite piston	38	160029-CO
MD 14022-K	W01 M58 6367	1T 17 BS-6		38	160030-CO
MD 14022-KP	W01 M58 6367	1 T 15 BS-6	Composite piston	39	160031-CO
D 300-04	W01 M58 6381	22C	* for this reference please contact sales dept.	93	130047-CO
D 300-01	W01 M58 6851	22C	* for this reference please contact sales dept.	92	130045-CO
D 300-02	W01 M58 6875	22C	* for this reference please contact sales dept.	93	130046-CO
D 220	W01 M58 6887	20CT		89	130050-CO
D 220-01	W01 M58 6891	20CT	* for this reference please contact sales dept.	89	130051-CO
D 370	W01 M58 7135	21	* for this reference please contact sales dept.	96	130048-CO
MD 14156-KP16	W01 M58 7295	1T 15 M-6		43	160042-CO
MD 14157-KP16	W01 M58 7307	1T 15 M9		48	160048-CO
MD 14159-16	W01 M58 7308	1T 15 M-9	* for this reference please contact sales dept.		130089-CO
MD 17315-KP	W01 M58 7315	1T 15 LUX-11		72	160113-CO
MD 14813-K	W01 M58 7358	1T 19 F-11		58	160068-CO
MD 1811	W01 M58 7370	1T 19 L-11		21	130003-CO
MD 1811-K05	W01 M58 7370	1T 19 L-11	45 ^{0} axial difference according to MD 1811-K	23	160012-CO
MD 11813-K	W01 M58 7385/8766	1T 19 L-14			160129-CO
D 370-01	W01 M58 7501	21	* for this reference please contact sales dept.	96	130049-CO
MD 197502-K	W01 M58 7502	1T 19 L-11		78	160151-CO
MD 14028-K	W01 M58 8106	1T 19 L-12		41	160035-CO
MD 18185-KP	W01 M58 8185	1T 15 MPW 9		74	160137-CO
MD 10302-K	W01 M58 8193	1T 15 VPR-3		35	160091-CO
MD 1942-K	W01 M58 8584	1T 66 D-13.5		34	160027-CO
MD 1940-KP	W01 M58 8585	1T 17 D-4.3		31	160024-CO
MD 14881	W01 M58 8601	1T 66 F-7.0		59	130037-CO
MD 14881-K	W01 M58 8602	1T 66 D-7.0		60	160069-CO
MD 14881-K01	W01 M58 8602	1T 66 D-7.0	180 ^{0} axial difference according to MD 14881-K	61	160170-CO
MD 14881-KP	W01 M58 8606	1T 66 D-7.0	Composite piston	60	160070-CO

CONNECT REF.	FIRESTONE		REMARKS	PAGE	System ID
MD 198608-KP	W01 M58 8608	1T 17 DJ-7		78	160134-CO
MD 1940-K	W01 M58 8609	1T 17 D-4.3		31	160023-CO
MD 1940-K01	W01 M58 8609	1T 17 D-4.3	180 º axial difference according to MD 1940-K	32	160171-CO
MD 1725-K03	W01 M58 8610	1T 66 F-10.8	Middle bolt assembling at bottom	19	160001-CO
MD 1942	W01 M58 8611	1T 66 F-13.5		34	130015-CO
MD 14022-KP05	W01 M58 8612	1 T 17 BS-6	Composite short piston	39	160032-CO
MD 1940	W01 M58 8613	1T 17 D-4.3		31	130013-CO
MD 1941-K	W01 M58 8619	1T 17 D-8.3		33	160025-CO
MD 1941	W01 M58 8620	1T 17 D-8.3		32	130014-CO
MD 198643-K	W01 M58 8643	1T 17 CL-9.5		78	160136-CO
MD 1881-KP	W01 M58 8667	1T 66 F-10.8		28	160021-CO
MD 1941-KP	W01 M58 8668	1T 17 D-8.3		33	160026-CO
MD 1889-K	W01 M58 8679	1T 15 LLR 5		30	160133 CH
MD 1887-K	W01 M58 8681	1T 15 LNR-3		29	160094-CO
MD 18683-K	W01 M58 8683	1T 15 LNR 3		75	160092-CO
MD 1836-K06	W01 M58 8701	1T 17 AR-4.5		27	160018-CO
MD 1836-K04	W01 M58 8705	1T 17 AR-4.5		27	160017-CO
MD 1836-K02	W01 M58 8721	1T 17 AR-4.5		26	160016-CO
MD 1836-K01	W01 M58 8722	1T 17 AR-4.5		25	160015-CO
MD 10081-K	W01 M58 8747	1T 17 B-11		35	160086-CO
MD 1810-KP	W01 M58 8775	1T 19 L-7	Composite piston	20	160005-CO
MD 14912-K	W01 M58 8786	1T 19 L-14		65	160073-CO
MD 14159-K05	W01 M58 8859 /379 9091	1T 15 M-9		51	160060-CO
MD 163007-KP	W01 M58 8948	1T 15 LUX-11		70	160121-CO
MD 1881-K	W01 M58 8966	1T 66 F-10.8		28	160019-CO
MD 1881-K01	W01 M58 8966	1T 66 F-10.8	180 º axial difference according to MD 1881-K	28	160169-CO
MD 1725-K02	W01 M58 8969	1T 66 F-10.8		19	160002-CO
MD 1881	W01 M58 8978	1T 66 F-10.8		27	130012-CO
MD 199048-KP	W01 M58 9048	1T 15 SN-6			160119-CO
MD 14156-K05	W01 M58 9089	1T 15 M-6		42	160041-CO
MD 14159-KP	W01 M58 9130	1T 15 M-9	Composite piston	50	160055-CO
MD 14156	W01 M58 9361	1T 15 M-6		41	130021-CO
MD 14156-K	W01 M58 9361	1T 15 M-6		41	160036-CO
MD 14713-K	W01 M58 9706	1T 17 BSR-8			160064-CO
MD 14420-K	W01 M58 9707	1T 17 BSR-5		54	160096-CO
MD 1902-K	W01 M58 9910	1T 19 G-12		30	160106-CO
C 196856	W01 358 6856	20F	Imperial application	110	
C 196884	W01 358 6884	20F	Imperial application	110	
C 196897	W01 358 6897	20F	Imperial application	111	
C 196900	W01 358 6900	20CT	Imperial application	109	130088-CO
C 196902	W01 358 6902	20F	Imperial application	111	130084-CO
C 196905	W01 358 6905	20F	Imperial application	111	
C 196890	W01 358 6908	20F	Imperial application	109	
C 196908	W01 358 6908	20F	Imperial application	112	
C 196910	W01 358 6910	20CT	Imperial application	109	130081-CO
C 196926	W01 358 6926	20CT	Imperial application	110	
C 196932	W01 358 6932	20F	Imperial application	112	
C 196935	W01 358 6935	20F	Imperial application	112	
C 197135	W01 358 7135	21D	Imperial application	113	130082-CO
C 197400	W01 358 7400	22C	Imperial application	113	130083-CO
C 197403	W01 358 7403	22C	Imperial application		
C 197410	W01 358 7410	22C	Imperial application	113	130075-CO
C 197443	W01 358 7443	22C	Imperial application	114	130092-CO
C 197784	W01 358 7784	233-2	Imperial application	114	130085-CO
198050-CS	W01 358 8050	1T 19 ZK-5.7	Imperial application	98	160158-CO
198091-CS	W01 358 8091	1T 19 FC-6/ 1T 19 LC-6	Imperial application	106	160154-CO
198091-CP	W01 358 8091	1T 19 FC-6/ 1T 19 LC-6	Imperial application		160198-CO
198204-CS	W01 358 8204	1T 15 M-2	Imperial application	105	
198709-CS	W01 358 8709	1T 17 CA-5	Imperial application	106	160155-CO
198709-CP	W01 358 8709	1T 17 CA-5	Imperial application		160197-CO
198729-CS	W01 358 8729	1T 17 BB-2	Imperial application	105	
198755-CS	W01 358 8755	1T 17 B-5	Imperial application	103	160156-CO
198944-CP	W01 358 8944	1T 15 MLW-7	Imperial application	105	
199069-CP	W01 358 9069	1T 15 M-4	Imperial application	101	
199082-CP	W01 358 9082	1T 15 M-6	Imperial application	97	160144-CO
199082-CS	W01 358 9082	1T 15 M-6	Imperial application	97	160145-CO
199101-CP	W01 358 9101	1T 15 M-9	Imperial application	107	160142-CO
199101-CS	W01 358 9101	1T 15 M-9	Imperial application	107	160143-CO
199121-CS	W01 358 9121	1T 19 F-7/1T 19L-7	Imperial application	107	160147-CO
199121-CP	W01 358 9121	1T 19 F-7/1T 19L-7	Imperial application	108	160146-CO
199156-CP	W01 358 9156	1T 19 F-11 / 1T 19 L-11	Imperial application	99	160110-CO
199156-CS	W01 358 9156	1T 19 F-11 / 1T 19 L-11	Imperial application	99	160109-CO
199243-CP	W01 358 9243	1T 15 M-9	Imperial application	108	
199265-CS	W01 358 9265	1T 15MM-9	Imperial application	102	160159-CO
199265-CP	W01 358 9265	1T 15 MM-9	Imperial application		160196-CO
199270-CS	W01 358 9270	1T 15 VP-4	Imperial application	98	160160-CO
199321-CP	W01 358 9321	1T 115-11	Imperial application	101	160107-CO
199321-CS	W01 358 9321	1T 115-11	Imperial application	101	160108-CO
199921-CP	W01 358 9321	1T 15 M-11	Imperial application	102	
199366-CS	W01 358 9366	1T 15 M-2	Imperial application	108	
199367-CS	W01 358 9367	1T 15 M-11	Imperial application	103	160116-CO
199367-CP	W01 358 9367	1T 15 M-11	Imperial application	104	160115-CO
199370-CP	W01 358 9370	1T 15 M-11	Imperial application	106	160149-CO
199394-CP	W01 358 9394	1T 15 M-9	Imperial application	102	
199580-CS	W01 358 9580	1T 17 CL-9.5	Imperial application	99	160153-CO
199580-CP	W01 358 9580	1T 19 ZK-5.7	Imperial application	100	160199-CO
199640-CS	W01 358 9640	1T 15 MT-3	Imperial application	103	160157-CO
199780-CALU	W01 358 9780	1T 15 ZR-6	Imperial application	104	160123-CO
199780-CP	W01 358 9780	1T 15 ZR-6	Imperial application	104	160122-CO
199122-CS	W01 3589122	1T 19 F-11/1T 19 L-11	Imperial application	97	160118-CO
199122-CP	W01 3589122	1T 19 F-11/1T 19 L-11	Imperial application	98	160117-CO

Goodyear References According to Connect

CONNECT REF.	GOODYEAR	REMARKS	PAGE	System ID
M 1673	8012		2	100004-CO
M 1944	8012		14	100035-CO
M 1715	8015		3	100008-CO
M 1644	8017		1	100001-CO
M 1661	8018		1	100002-CO
M 1897	8028		11	100030-CO
M 1927	8037		12	100032-CO
M 1928	8042		13	100033-CO
M 1921	8043		12	
M 1727	8117		4	100012-CO
M 1719	8118		4	100010-CO
M 1876	8314		10	100049-CO
M 1943	9001		13	100034-CO
M 1884	9002		11	100028-CO
M 11885	9003		15	100038-CO
M 141525	9004		17	100042-CO
M 141528	9005		17	100043-CO
M 1701	9006		2	100005-CO
M 1662	9007		1	100003-CO
M 1720	9008		4	100011-CO
M 1762	9010		6	100017-CO
M 1883	9012		10	100027-CO
M 1782	9013		7	100020-CO
M 1945	9014		14	100036-CO
M 1916	9015		12	100031-CO
M 1713	9066		3	100007-CO
M 1706	9067		2	100006-CO
MD 14390-01	9507	Voss 232	53	130032-CO
MD 14390-02	9508	Voss 232	53	130033-CO
MD 14757	9517	Voss 232	56	130042-CO
MD 14757-K	9517	Voss 232	57	160078-CO
MD 14757-09	9518	Voss 232	57	130043-CO
MD 14882	1 R 10-702		61	130059-CO
MD 14157-KP14	1 R 11-111		46	160045-CO
MD 1941	1 R 11-700		32	130014-CO
MD 1941-K	1 R 11-701		33	160025-CO
MD 1940	1 R 11-703		31	130013-CO
MD 14004	1 R 11-705		37	130016-CO
MD 14004-K	1 R 11-706		37	160028-CO
MD 14022	1 R 11-709		38	130017-CO
MD 14022-K	1 R 11-710		38	160030-CO
MD 1724	1 R 11-711		79	130079-CO
MD 14004-KP	1 R 11-713	Composite piston	38	160029-CO
MD 14022-KP	1 R 11-714	Composite piston	39	160031-CO
MD 1941-KP	1 R 11-743		33	160026-CO
MD 1940-KP	1 R 11-752		31	160024-CO
MD 1940-K	1 R 11-763		31	160023-CO
MD 18185-KP	1 R 11-764		74	160137-CO
MD 196315-KP	1 R 11-772	Composite piston	77	160112-CO
MD 14157-KP18	1 R 11-773		47	
MD 14022-KP05	1 R 11-781	Composite short piston	39	160032-CO
MD 1887	1 R 11-796		29	130071-CO
MD 14940	1 R 11-799		67	130063-CO
MD 14961	1 R 11-800		69	130065-CO
MD 14960	1 R 11-801		68	130064-CO
MD 14941	1 R 11-802		67	130062-CO
MD 14883	1 R 11-804		62	130060-CO
MD 14884	1 R 11-820		63	130066-CO
MD 1836-01	1 R 12-700		25	130009-CO
MD 14159-K	1 R 12-701		50	160054-CO
MD 14159-K05	1 R 12-702		51	160060-CO
MD 191209-K	1 R 12-703		75	160139-CO
MD 14156-K	1 R 12-704		41	160036-CO
MD 14156-K05	1 R 12-706		42	160041-CO
M 1809	1 R 12-709		8	100022-CO
MD 1836-02	1 R 12-710		26	130010-CO
MD 1836-K02	1 R 12-711		26	160016-CO

CONNECT REF.	GOODYEAR	REMARKS	PAGE	System ID
MD 1836-K01	1 R 12-712		25	160015-CO
MD 14159-KP16	1 R 12-713		82	160178-CO
MD 191210-K	1 R 12-720		75	160140-CO
MD 14159-KP09	1 R 12-721	Composite piston with middle assembly type	52	160058-CO
MD 14158	1 R 12-748		49	130029-CO
MD 14158-KP	1 R 12-749	Composite piston	49	160053-CO
MD 14159-KP	1 R 12-760	Composite piston	50	160055-CO
MD 14159	1 R 12-761		50	130030-CO
MD 14713-K	1 R 12-762		55	160064-CO
MD 14713	1 R 12-763		55	130034-CO
MD 1836-04	1 R 12-764		26	130011-CO
MD 1836-K06	1 R 12-768		27	160018-CO
MD 10302-K	1 R 12-809		35	160091-CO
MD 10081-K	1 R 13-150		35	160086-CO
MD 198643-K	1 R 13-167		78	160136-CO
MD 14912	1 R 13-713		65	130039-CO
MD 14911	1 R 13-715		64	130038-CO
MD 191305-K	1 R 13-730		76	160148-CO
MD 14912-K	1 R 13-738		65	160073-CO
MD 16199-K	1 R 13-744		70	160120-CO
MD 16200-K	1 R 13-745		70	160126-CO
MD 1942	1 R 14-700		34	130015-CO
MD 14881	1 R 14-701		59	130037-CO
MD 1811-K05	1 R 14-705	45 axial difference according to MD 1811-K	23	160012-CO
MD 191318-K	1 R 14-706		76	160150-CO
MD 1881	1 R 14-708		27	130012-CO
MD 197502-K	1 R 14-709		78	160151-CO
MD 1813-K	1 R 14-711		24	160013-CO
MD 1881-K	1 R 14-712		28	160019-CO
MD 1810-K	1 R 14-716		20	160004-CO
MD 1811-K03	1 R 14-718		22	160011-CO
MD 1811-K16	1 R 14-719		24	160009-CO
MD 1811	1 R 14-721		21	130003-CO
MD 14881-K01	1 R 14-724	180 axial difference according to MD 14881-K	61	160170-CO
MD 14881-K	1 R 14-724		60	160069-CO
MD 14813-K	1 R 14-727		58	160068-CO
MD 14023-KP	1 R 14-729	Composite piston	40	160034-CO
MD 14023-K	1 R 14-729		40	160033-CO
MD 14810-K05	1 R 14-730	2 bolts type of MD 1810-K	58	160093-CO
MD 1725-K02	1 R 14-747		19	160002-CO
MD 14913-K	1 R 14-753		66	160075-CO
MD 14913	1 R 14-755		66	130040-CO
MD 1725-K03	1 R 14-756	Middle bolt assembling at bottom	19	160001-CO
MD 14881-KP	1 R 14-757	Composite piston	60	160070-CO
MD 1942-K	1 R 14-781		34	160027-CO
MD 14028	1 R 14-782		40	130019-CO
MD 14028-K	1 R 14-783		41	160035-CO
D 300-01	2 B 12-327	* for this reference please contact sales dept.	92	130045-CO
D 300-04	2 B 12-425	* for this reference please contact sales dept.	93	130047-CO
D 370	2 B 14-360	* for this reference please contact sales dept.	96	130048-CO
D 370-01	2 B 14-465	* for this reference please contact sales dept.	96	130049-CO
D 220	2 B 9-223		89	130050-CO
D 220-01	2 B 9-287	* for this reference please contact sales dept.	89	130051-CO
D 300-10	SP 12 RA2	* for this reference please contact sales dept.	95	
D 300-08	SP 2 B 22R	* for this reference please contact sales dept.	95	
D 300-09	SP 2 B 22R	* for this reference please contact sales dept.	95	
199121-CS	1 R 12-039	Imperial application	107	160147-CO
199121-CP	1 R 12-039	Imperial application	108	160146-CO
199082-CP	1 R 12-092	Imperial application	97	160144-CO
199082-CS	1 R 12-092	Imperial application	97	160145-CO
199101-CP	1 R 12-103	Imperial application	107	160142-CO
199101-CS	1 R 12-103	Imperial application	107	160143-CO
199069-CP	1 R 12-256	Imperial application	101	
199321-CP	1 R 12-256	Imperial application	101	160107-CO
199321-CS	1 R 12-256	Imperial application	101	160108-CO
199921-CP	1 R 12-256	Imperial application	102	
199367-CS	1 R 12-256	Imperial application	103	160116-CO

CONNECT REF.	GOODYEAR	REMARKS	PAGE	System ID
199367-CP	1 R 12-256	Imperial application	104	160115-CO
199394-CP	1 R 12-281	Imperial application	102	
199580-CP	1 R 12-281	Imperial application	100	160199-CO
162290 CS	1 R 12-290	Imperial application		160188-CO
199780-CALU	1 R 12-303	Imperial application	104	160123-CO
199780-CP	1 R 12-303	Imperial application	104	160122-CO
198944-CP	1 R 12-366	Imperial application	105	
199640-CS	1 R 12-367	Imperial application	103	160157-CO
199265-CS	1 R 12-375	Imperial application	102	160159-CO
199265-CP	1 R 12-375	Imperial application		160196-CO
199370-CP	1 R 12-440	Imperial application	106	160149-CO
199243-CP	1 R 12-480	Imperial application	108	
199366-CS	1 R 12-487	Imperial application	108	
198204-CS	1 R 12-522	Imperial application	105	
199122-CS	1 R 13-038	Imperial application	97	160118-CO
199122-CP	1 R 13-038	Imperial application	98	160117-CO
199580-CS	1 R 13-118	Imperial application	99	160153-CO
199270-CS	1 R 13-119	Imperial application	98	160160-CO
198755-CS	1 R 13-124	Imperial application	103	160156-CO
198729-CS	1 R 13-130	Imperial application	105	
198709-CS	1 R 13-159	Imperial application	106	160155-CO
198709-CP	1 R 13-159	Imperial application		160197-CO
199156-CP	1 R 14-019	Imperial application	99	160110-CO
199156-CS	1 R 14-019	Imperial application	99	160109-CO
198050-CS	1 R 14-039	Imperial application	98	160158-CO
198091-CS	1 R 14-171	Imperial application	106	160154-CO
198091-CP	1 R 14-171	Imperial application		160198-CO
C 197784	2 B 14-465	Imperial application	114	130085-CO
C 196910	2 B 9-200	Imperial application	109	130081-CO
C 196902	2 B 9-201	Imperial application	111	130084-CO
C 196905	2 B 9-206	Imperial application	111	
C 196890	2 B 9-210	Imperial application	109	
C 196897	2 B 9-229	Imperial application	111	
C 196932	2 B 9-246	Imperial application	112	

Connect to Phoenix References

PHOENIX	CONNECT REF.	REMARKS	PAGE	System ID
1 D 23 C-1	M 1809		8	100022-CO
1 D 23 E-3	MD 191209-K		75	160139-CO
1 D 28 A-10	MD 14810-K05	2 bolts type of MD 1810-K	58	160093-CO
1 D 28 A-2	MD 1810-K		20	160004-CO
1 D 28 A-5 NP.	MD 1810		20	130002-CO
1 D 28 B-10	MD 14028-K		41	160035-CO
1 D 28 B-10 NP	MD 14028		40	130019-CO
1 D 28 B-2	MD 1813-K		24	160013-CO
1 D 28 B-2E2	MD 1811-K		21	160008-CO
1 D 28 B-5 NP.	MD 1813		24	130008-CO
1 D 28 B-7	MD 1811-K16		24	160009-CO
1 D 28 B-9	MD 14813-K		58	160068-CO
1 D 28 D-2	MD 11813-K			160129-CO
1 D 28 H-16	MD 14913-K		66	160075-CO
1 D 28 H-16 NP.	MD 14913		66	130040-CO
1 DF 22 C-1	MD 14713-K		55	160064-CO
1 DF 25-1 NP.	MD 1836-01		25	130009-CO
1 DF 25-11	MD 1836-K01		25	160015-CO
1 DF 25-13	MD 1836-K02		26	160016-CO
1 DF 25-14	MD 1836-K04		27	160017-CO
1 DF 25-15	MD 1836-K06		27	160018-CO
1 DF 25-3 NP	MD 1836-02		26	130010-CO
1 DF 25-4 NP.	MD 1836-04		26	130011-CO
1 DK 20 A-51	MD 196315-KP	Composite piston	77	160112-CO
1 DK 20 B-1 NP	MD 14158		49	130029-CO
1 DK 20C-2	MD 14157-KP08		47	160051-CO
1 DK 21	MD 1941		32	130014-CO
1 DK 21 A-3	MD 14157-KP15		46	160044-CO
1 DK 21 A-4	MD 14157-KP14		46	160045-CO
1 DK 21 B-5 NP	MD 14159		50	130030-CO
1 DK 21 K	MD 1940		31	130013-CO
1 DK 21 K-3	MD 14157-KP05		44	160043-CO
1 DK 22 E-11	MD 14022-KP05	Composite short piston	39	160032-CO
1 DK 22 E-5	MD 14004-K		37	160028-CO
1 DK 22 E-5 NP.	MD 14004		37	130016-CO
1 DK 22 E-9	MD 14022-KP	Composite piston	39	160031-CO
1 DK 22 E-9	MD 14022-K		38	160030-CO
1 DK 22 E-9 NP.	MD 14022		38	130017-CO
1 DK 23 F-1	MD 14154-KP05	Composite piston	81	160168-CO
1 DK 23 L-25	MD 14159-KP09	Composite piston with middle assembly type	52	160058-CO
1 DK 23 L-27	MD 14159-K		50	160054-CO
1 DK 32	MD 1881		27	130012-CO
1 DK 32 K	MD 14881-K01	180 ^{0} axial difference according to MD 14881-K	61	160170-CO
1 DK 32 K	MD 14881-KP	Composite piston	60	160070-CO
1 DK 32 K	MD 14881-K		60	160069-CO
1 DK 32 L	MD 1942		34	130015-CO
1 E 10	M 1975		14	100048-CO
1 E 21 C	M 1945		14	100036-CO
1 E 21 gekr.	M 1644		1	100001-CO
1 E 25 gekr.	M 1661		1	100002-CO
1 E 32	M 1662		1	100003-CO
1 E 782	M 1782		7	100020-CO
1 F 14	M 1786		7	100021-CO
1 F 16	M 1882		10	100026-CO
1 F 20 A	M 1884		11	100028-CO
1 F 20B	M 11885		15	100038-CO
1 F 21	M 1720		4	100011-CO
1 F 21 A	M 1673		2	100004-CO
1 F 21 C-2	M 1883		10	100027-CO
1 F 21 C-5	M 1916		12	100031-CO
1 F 21 D	M 1713		3	100007-CO
1 F 25	M 1715		3	100008-CO
1 F 26	M 1737		5	100014-CO
1 F 26 B-1	M 1716		3	100009-CO
1 F 26 C	M 1757		6	100016-CO
1 F 26 D	M 1838		9	100025-CO
1 F 32	M 1762		6	100017-CO
1 F 32 A	M 1727		4	100012-CO
1 F 32 B	M 1719		4	100010-CO
1 KF 21-1	MD 14390-K01	Voss 232	53	160062-CO
1 KF 21-1 NP	MD 14390-01	Voss 232	53	130032-CO
1 KF 21-2	MD 14390-K02	Voss 232	54	160063-CO
1 KF 21-2 NP.	MD 14390-02	Voss 232	53	130033-CO
1 R 2D 470-360	M 1728		5	100013-CO
2 E 18 A	M 1896		11	100029-CO
2 E 18 B	M 1927		12	100032-CO
2 E 23	M 1897		11	100030-CO
2 E 23 A	M 1928		13	100033-CO

PHOENIX	CONNECT REF.	REMARKS	PAGE	System ID
2 G 20	M 141525		17	100042-CO
2 G 20 A	M 141528		17	100043-CO
SP 2 B 12 R 1/4 M10	D 220-05	* for this reference please contact sales dept.	90	130054-CO
1 D 28 C-9122	199122-CS	Imperial application	97	160118-CO
1 D 28 G-9121	199121-CS	Imperial application	107	160147-CO
1 DK 23 K-9082	199082-CS	Imperial application	97	160145-CO
1 DK 23 K-9780	199780-CP	Imperial application	104	160122-CO
1 DK 23 L-9101	199101-CS	Imperial application	107	160143-CO

Connect to Airtech References

AIRTECH	CONNECT REF.	REMARKS	PAGE	System ID
3644	M 1644		1	100001-CO
3661	M 1661		1	100002-CO
3662	M 1662		1	100003-CO
3673	M 1673		2	100004-CO
3701	M 1701		2	100005-CO
3706	M 1706		2	100006-CO
3713	M 1713		3	100007-CO
3715	M 1715		3	100008-CO
3716	M 1716		3	100009-CO
3717	M 1817		8	*
3719	M 1719		4	100010-CO
3720	M 1720		4	100011-CO
3727	M 1727		4	100012-CO
3728	M 1728		5	100013-CO
3737	M 1737		5	100014-CO
3746	M 1746		5	100015-CO
3757	M 1757		6	100016-CO
3762	M 1762		6	100017-CO
3768	M 1768		6	100018-CO
3769	M 1769		7	100019-CO
3782	M 1782		7	100020-CO
3786	M 1786		7	100021-CO
3809	M 1809		8	100022-CO
3819	M 1819		9	100024-CO
3838	M 1838		9	100025-CO
3873	M 1873		9	*
3876	M 1876		10	100049-CO
3882	M 1882		10	100026-CO
3883	M 1883		10	100027-CO
3884	M 1884		11	100028-CO
3896	M 1896		11	100029-CO
3897	M 1897		11	100030-CO
3916	M 1916		12	100031-CO
3921	M 1921		12	*
3927	M 1927		12	100032-CO
3928	M 1928		13	100033-CO
3936	M 1936		13	*
3943	M 1943		13	100034-CO
3944	M 1944		14	100035-CO
3945	M 1945		14	100036-CO
3975	M 1975		14	100048-CO
31277	M 190453	* for this reference please contact sales dept.	16	*
31421	M 11421		15	100037-CO
31720	M 11720		15	*
31774	M 11774		18	100044-CO
31885	M 11885		15	100038-CO
31924	M 11924		16	100040-ST
14390 01 P	MD 14390-01	Voss 232	53	130032-CO
14390-02 P	MD 14390-02	Voss 232	53	130033-CO
30081 K	MD 10081-K		35	160086-CO
32619 KPP	MD 14022-KP05	Composite short piston	39	160032-CO
32725 K	MD 12725-K		37	160003-CO
32725 P	MD 12725		36	130001-CO
32918 K	MD 14810-K05	2 bolts type of MD 1810-K	58	160093-CO
32926-K	MD 11813-K02		*	160130-CO
330302 K	MD 10302-K		35	160091-CO
330304 K	MD 10304-K		35	160084-CO
330305 K	MD 10305-K		36	160138-CO
334506 K	MD 14506-K		54	160085-CO
34004 K	MD 14004-K		37	160028-CO
34004 KPP	MD 14004-KP	Composite piston	38	160029-CO
34004 P	MD 14004		37	130016-CO

AIRTECH	CONNECT REF.	REMARKS	PAGE	System ID
34022 K	MD 14022-K		38	160030-CO
34022 KPP	MD 14022-KP	Composite piston	39	160031-CO
34022 P	MD 14022		38	130017-CO
34023 K	MD 14023-K		40	160033-CO
34023 KPP	MD 14023-KP	Composite piston	40	160034-CO
34023 P	MD 14023		39	130018-CO
34028 K	MD 14028-K		41	160035-CO
34028 P	MD 14028		40	130019-CO
3415-25	M 141525		17	100042-CO
3415-28	M 141528		17	100043-CO
34154 KPP	MD 14154-KP		81	160131-CO
34154-01	MD 14154		81	130020-CO
34156 K	MD 14156-K		41	160036-CO
34156 K03	MD 14156-K05		42	160041-CO
34156 KPP	MD 14156-KP		42	160037-CO
34156 P	MD 14156		41	130021-CO
34156-06P	MD 14156-16		42	130023-CO
34156-07KPP	MD 14156-KP16		43	160042-CO
34157 K	MD 14157-KP04		44	160046-CO
34158 KPP	MD 14158-KP	Composite piston	49	160053-CO
34158 P	MD 14158		49	130029-CO
34159 K	MD 14159-K03		51	160059-CO
34159 K05	MD 14159-K05		51	160060-CO
34159 P	MD 14159		50	130030-CO
34159-02 K	MD 14159-K		50	160054-CO
34159-02 KPP	MD 14159-KP09	Composite piston with middle assembly type	52	160058-CO
34159-10 KPP	MD 14159-KP	Composite piston	50	160055-CO
34183-23 K	MD 14183-K	Voss 232	52	160125-CO
34183-23 P	MD 14183	Voss 232	52	130087-CO
34338 P	MD 14838	Voss 232	59	130041-CO
34390-01K	MD 14390-K01	Voss 232	53	160062-CO
34390-02K	MD 14390-K02	Voss 232	54	160063-CO
34420 K	MD 14420-K		54	160096-CO
3450-25	M 145025		18	*
34713 K	MD 14713-K		55	160064-CO
34713 P	MD 14713		55	130034-CO
34718 K	MD 14718-K		56	160065-CO
34737-01 P	MD 14737	Voss 232	83	130035-CO
34737-01K	MD 14737-K01		84	160167-ST
34737-02K	MD 14737-K02	Voss 232	56	160066-ST
34757 01P	MD 14757	Voss 232	56	130042-CO
34757 02P	MD 14757-09	Voss 232	57	130043-CO
34757 K01	MD 14757-K	Voss 232	57	160078-CO
34757 K02	MD 14757-K09	Voss 232	57	160079-CO
34813 P	MD 14813		58	130036-CO
34813-K	MD 14813-K		58	160068-CO
34838 K01	MD 14838-K	Voss 232	59	160077-CO
34881 K	MD 14881-K01	180 ^{0} axial difference according to MD 14881-K	61	160170-CO
34881 K01	MD 14881-K		60	160069-CO
34881 KP	MD 14881-KP	Composite piston	60	160070-CO
34881 KP01	MD 14881-KP01	180 ^{0} axial difference according to MD 14881-KP	60	160174-CO
34881 P	MD 14881		59	130037-CO
34882 K	MD 14882-K		61	160102-CO
34882 P	MD 14882		61	130059-CO
34883 K	MD 14883-K		62	160127-CO
34883 P	MD 14883		62	130060-CO
34884 K	MD 14884-K		63	160104-CO
34884 P	MD 14884		63	130066-CO
34911 K	MD 14911-K		64	160071-CO
34911 P	MD 14911		64	130038-CO
34912 K	MD 14912-K		65	160073-CO
34912 P	MD 14912		65	130039-CO

AIRTECH	CONNECT REF.	REMARKS	PAGE	System ID
34913 K	MD 14913-K		66	160075-CO
34913 P	MD 14913		66	130040-CO
34925 P	MD 14925-K		66	160124-CO
34940 K	MD 14940-K		67	160098-CO
34940 P	MD 14940		67	130063-CO
34941 K	MD 14941-K		68	160097-CO
34941 P	MD 14941		67	130062-CO
34960 K	MD 14960-K		68	160099-CO
34960 KPP	MD 14960-KP	Composite piston	69	160100-CO
34960 P	MD 14960		68	130064-CO
34961 KPP	MD 14961-K		69	160101-CO
34961 P	MD 14961		69	130065-CO
36108 K	MD 16604-K		72	160128-CO
36199 K	MD 16199-K		70	160120-CO
36200 K	MD 16200-K		70	160126-CO
36251-K	MD 196251-KP		77	160111-CO
36416 K	MD 16416-K		71	160081-CO
36416 P	MD 16416		71	130067-CO
36418 K	MD 16418-K		72	160082-CO
36418 P	MD 16418		71	130068-CO
36644 P	MD 14644	Voss 232	55	130077-CO
3724 K	MD 1724-K		19	160187-CO
3724 P	MD 1724		79	130079-CO
3725-01 K	MD 1725-K03	Middle bolt assembling at bottom	19	160001-CO
3725-K	MD 1725-K02		19	160002-CO
37803 K	MD 17803-K		73	160087-CO
37803 P	MD 17803		73	130069-CO
37804 K	MD 17804		74	130070-CO
37804 K	MD 17804-K		74	160083-CO
3810 K	MD 1810-K		20	160004-CO
3810 P	MD 1810		20	130002-CO
3811- P	MD 1811-03		22	130006-CO
3811-01K	MD 1811-02		21	130005-CO
3811-02K	MD 1811-K05	45 ^{0} axial difference according to MD 1811-K	23	160012-CO
3811-02K	MD 1811		21	130003-CO
3811-03 P	MD 1811-16		23	130004-CO
3811-03K	MD 1811-K16		24	160009-CO
3813 K	MD 1813-K		24	160013-CO
3813 P	MD 1813		24	130008-CO
38185 K	MD 18185-KP		74	160137-CO
3836 K	MD 1836-K01		25	160015-CO
3836 K02	MD 1836-K02		26	160016-CO
3836 K04	MD 1836-K04		27	160017-CO
3836 K06	MD 1836-K06		27	160018-CO
3836 P	MD 1836-01		25	130009-CO
3836-01	MD 1836-04		26	130011-CO
3836-02 P	MD 1836-02		26	130010-CO
38608 KPP	MD 198608-KP		78	160134-CO
38683 K	MD 18683-K		75	160092-CO
3881 K	MD 1881-K		28	160019-CO
3881 K01	MD 1881-K01	180 ^{0} axial difference according to MD 1881-K	28	160169-CO
3881 KP	MD 1881-KP		28	160021-CO
3881 KP01	MD 1881-KP01	180 ^{0} axial difference according to MD 1881-KP	29	160173-CO
3881 P	MD 1881		27	130012-CO
3887 K	MD 1887-K06		30	160095-CO
3887 P	MD 1887		29	130071-CO
39002 A3 KPP	MD 14157-KP15		46	160044-CO
39002 A8-KPP	MD 14157-KP14		46	160045-CO
39002-A3/08 KPP	MD 14157-KP18		47	*
39002-A3-01KPP	MD 196315-KP	Composite piston	77	160112-CO
3902 K	MD 1902-K		30	160106-CO
391209 K	MD 191209-K		75	160139-CO

AIRTECH	CONNECT REF.	REMARKS	PAGE	System ID
391210 K	MD 191210-K		75	160140-CO
391305 K	MD 191305-K		76	160148-CO
391314-K	MD 11813-K		*	160129-CO
391318 K	MD 191318-K		76	160150-CO
391318-K01	MD 191318-K01	180 ^{0} axial difference according to MD 191318-K	88	160181-CO
391319-K	MD 191319-K		88	160184-CO
3940 01KPP	MD 1940-KP01	180 ^{0} axial difference according to MD 1940-KP	32	160175-CO
3940 K	MD 1940-K01	180 ^{0} axial difference according to MD 1940-K	32	160171-CO
3940 K	MD 1940-K		31	160023-CO
3940 KPP	MD 1940-KP		31	160024-CO
3940 P	MD 1940		31	130013-CO,
3941 K	MD 1941-K		33	160025-CO
3941 KPP	MD 1941-KP		33	160026-CO
3941 P	MD 1941		32	130014-CO
3942 K	MD 1942-K		34	160027-CO
3942 P	MD 1942		34	130015-CO
113017	C 196910	Imperial application	109	130081-CO
113311	C 197443	Imperial application	114	130092-CO
113333	C 197400	Imperial application	113	130083-CO
113334	C 197410	Imperial application	113	130075-CO
113339	C 197403	Imperial application	*	*
113454	C 197135	Imperial application	113	130082-CO
30081 01 K	199580-CS	Imperial application	99	160153-CO
32303 K	199780-CALU	Imperial application	104	160123-CO
32303 K	199780-CP	Imperial application	104	160122-CO
34156 05 KPP	199082-CP	Imperial application	97	160144-CO
34156 05 KPP	199082-CS	Imperial application	97	160145-CO
34159 07 KPP	199101-CP	Imperial application	107	160142-CO
34159 07 KPP	199101-CS	Imperial application	107	160143-CO
38050 K	198050-CS	Imperial application	98	160158-CO
3813 K05	199122-CS	Imperial application	97	160116-CO
3813 K05	199122-CP	Imperial application	98	160117-CO
39069 K	199069-CP	Imperial application	101	*
39121 K	199121-CS	Imperial application	107	160147-CO
39121 K	199121-CP	Imperial application	108	160146-CO
39265 K	199265-CS	Imperial application	102	160159-CO
39270 K	199270-CS	Imperial application	98	160160-CO
39321 K	199321-CP	Imperial application	101	160107-CO
39321 K	199321-CS	Imperial application	101	160108-CO

Connect to Airkraft References

AIRKRAFT	CONNECT REF.	REMARKS	PAGE	System ID
113001	D 220		89	130050-CO
113002	D 220-08	* for this reference please contact sales dept.	91	130056-CO
113003	D 220-04	* for this reference please contact sales dept.	90	130053-CO
113011	D 220-01	* for this reference please contact sales dept.	89	130051-CO
113015	D 220-03	* for this reference please contact sales dept.	89	130052-CO
113021	D 220-05	* for this reference please contact sales dept.	90	130054-CO
113307	D 300-04	* for this reference please contact sales dept.	93	130047-CO
113308	D 300-05	* for this reference please contact sales dept.	94	*
113309	D 300-06	* for this reference please contact sales dept.	94	*
113310	D 300-07	* for this reference please contact sales dept.	94	*
113312	D 300-01	* for this reference please contact sales dept.	92	130045-CO
113312	D 300-08	* for this reference please contact sales dept.	95	*
113313	D 300-09	* for this reference please contact sales dept.	95	*
113320	D 300-10	* for this reference please contact sales dept.	95	*
113333	D 300-03	* for this reference please contact sales dept.	93	*
113342	D 300-02	* for this reference please contact sales dept.	93	130046-CO
113473	D 220-09	* for this reference please contact sales dept.	91	130057-CO

Connect to Dunlop References

DUNLOP	CONNECT REF.	REMARKS	PAGE	System ID
A 310 950013	M 190453	* for this reference please contact sales dept.	16	*
D10S02	M 1769		7	100019-CO
D10S04	M 1921		12	*
D11501	M 1644		1	100001-CO
D11S03	M 1943		13	100034-CO
D11S2	M 1945		14	100036-CO
D12B13	MD 14004-K		37	160028-CO
D12B13	MD 14004-KP	Composite piston	38	160029-CO
D12B19	MD 14156-K		41	160036-CO
D12B19	MD 14156-KP		42	160037-CO
D12B22	MD 14158-KP	Composite piston	49	160053-CO
D12B24	MD 14713-K		55	160064-CO
D12S01	M 1936		13	*
D12S02	M 1661		1	100002-CO
D12S03	M 1928		13	100033-CO
D12S04	M 1720		4	100011-CO
D12S07	M 11885		15	100038-CO
D12S08	M 141525		17	100042-CO
D12S09	M 141528		17	100043-CO
D12S13	M 145025		18	*
D13B03	MD 11813-K		*	160129-CO
D13B25	MD 14022-K		38	160030-CO
D13B25	MD 14022-KP	Composite piston	39	160031-CO
D13B26	MD 14023-K		40	160033-CO
D13S01	M 1662		1	100003-CO
D13S04	M 1727		4	100012-CO
D14837	MD 14881-K		60	160069-CO
D14B88	MD 14881-KP01	180 ^{0} axial difference according to MD 14881-KP	60	160174-CO
PNP 300080100	M 1927		12	100032-CO
PNP 304620101	M 1719		4	100010-CO
PNP 304890101	M 1715		3	100008-CO
PNP 306420100	M 1728		5	100013-CO
SP 2191	M 1896		11	100029-CO
SP 2192	M 1897		11	100030-CO
SP1217	M 1944		14	100035-CO

AIR EXPERT

Connect to CF GOMMA References

CF GOMMA	CONNECT REF.	REMARKS	PAGE	System ID
1 S 270-25 C	M 1782		7	100020-CO
1 S 270-25C	M 1884		11	100028-CO
1 S 280-25	M 141525		17	100042-CO
1 S 280-28	M 141528		17	100043-CO
1 S 285-18	M 1896		11	100029-CO
1 S 285-18	M 1943		13	100034-CO
1 S 285-22	M 1944		14	100035-CO
1 S 285-23	M 1921		12	*
1 S 285-24	M 1644		1	100001-CO
1 S 285-25	M 1945		14	100036-CO
1 S 300-27	M 145025		18	*
1 S 310-28	M 1661		1	100002-CO
1 S 320 30	M 1897		11	100030-CO
1 S 320-23	M 1737		5	100014-CO
1 SC 240-30	M 1769		7	100019-CO
1 SC 250-28	M 1882		10	100026-CO
1 SC 250-29 - 204250	M 1883		10	100027-CO
1 SC 270-28	M 11885		15	100038-CO
1 SC 285-22	M 1673		2	100004-CO
1 SC 290-30	M 1720		4	100011-CO
1 SC 300-34	M 1716		3	100009-CO
1 SC 310-16	M 1715		3	100008-CO
1 SC 360-30	M 1662		1	100003-CO
1 SC 360-30	M 1762		6	100017-CO
1 SC 360-34	M 1727		4	100012-CO
1 SC 360-34	M 1728		5	100013-CO
1 SC 360-43	M 1719		4	100010-CO
1 T 19 E-1	MD 1810-K		20	160004-CO
1 T 19 E-2	MD 14023-KP	Composite piston	40	160034-CO
1 T 19 E-2	MD 1811-02		21	130005-CO
1 T 19 E-2	MD 1811-K03		22	160011-CO
1 T 19 E-2	MD 1813-K		24	160013-CO
1 T 19 E-2	MD 14023-K		40	160033-CO
1 T 19 E-2 BR	MD 14813-K		58	160068-CO
1 T 19 E-4 206779	MD 14912-K		65	160073-CO
1 T 19 E-5 steel	MD 14004		37	130016-CO
1 T 19 E-9.3 206201	MD 14913-K		66	160075-CO
1 T 19-E2	MD 14420-K		54	160096-CO
1 T 19E-2	MD 191318-K		76	160150-CO
1 T 19E-2 BR	MD 14813 58		*	130036-CO
1 T 300-36	MD 1941		32	130014-CO
1 T 300-37	MD 14004-KP	Composite piston	38	160029-CO
1 T 300-37	MD 14004-K		37	160028-CO
1 T 300-37	MD 14022-K		38	160030-CO
1 T 323-32	MD 14156		41	130021-CO
1 T 323-32	MD 14156-K		41	160036-CO
1 T 323-33	MD 14156-KP		42	160037-CO
1 T 323-40	MD 14159		50	130030-CO
1 T 323-40	MD 191209-K		75	160139-CO
1 T 323-40	MD 191210-K		75	160140-CO
1 T19E-1 - 93702	M 1810		8	*
1 T320SP 89753	M 1809		8	100022-CO
1 T323-40	MD 14159-KP09	Composite piston with middle assembly type	52	160058-CO
1 T323-40	MD 14159-K		50	160054-CO
1 T353-40	MD 14159-K05		51	160060-CO
1 TC 360-45	MD 1881		27	130012-CO
1 TC 360-45	MD 1881-K01	180 ^{0} axial difference according to MD 1881-K	28	160169-CO
1 TC 360-45	MD 1881-K		28	160019-CO
1 TS 300-28	MD 1471355		*	130034-CO
1 VSC 285-30	MD 14390-01	Voss 232	53	130032-CO
1 VSC 285-30	MD 14390-02	Voss 232	53	130033-CO
1T 19 E-2	MD 191319-K		88	160184-CO
1T 19E-2	MD 14023		39	130018-CO
1T 19E-4	MD 11813-K		*	160129-CO
1T19 E2-204676	MD 14810-K05	2 bolts type of MD 1810-K	58	160093-CO
20 206797	D 220		89	130050-CO
20 L 207065	D 220-01	* for this reference please contact sales dept.	89	130051-CO
1T 323-40	199101-CP	Imperial application	107	160142-CO
1T 323-40	199101-CS	Imperial application	107	160143-CO

AIR EXPERT®

CATALOGUE 2010



PRODUCTS

AIR EXPERT

1300644

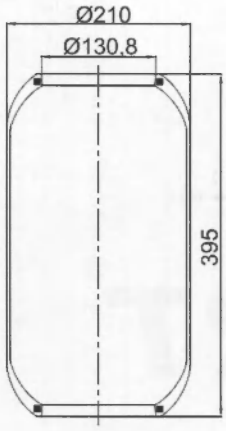

Order No	
100001	
weight(kg)	
1,6	
QIP(pcs)	
50	
Remarks	

CONTITECH	
644 N	
FIRESTONE	
1R1A 390-295	
W01 095 0118	
GOODYEAR	
8017	
PHOENIX	
1 E 21	
AIRTECH	
3644	
CF GOMMA	
1 S 285-24	
CONNECT	
M 1644	

BPW	02.2002.44.00
BUSSING	536905265/6
DAF	689677
EVO-BUS	A 000.327.0101
GRANNING	15622
HANOMAG-HENSCHEL	536905265
M.A.N	81436010017
MAGIRUS-DEUTZ	536905265
MENARINI	199196
MERCEDES	000.327.0101
NEOPLAN	1001 12 254
VOLVO	1134445

1300661

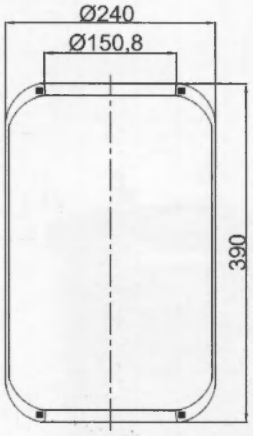

Order No	
100002	
weight(kg)	
1,6	
QIP(pcs)	
40	
Remarks	

CONTITECH	
661 N	
FIRESTONE	
1R1C 390-310	
W01 095 0021	
GOODYEAR	
8018	
PHOENIX	
1 E 25	
AIRTECH	
3661	
CF GOMMA	
1 S 310-28	
CONNECT	
M 1661	

BUSSING	831120144
EVO-BUS	4731012000
HANOMAG-HENSCHEL	546905134
IVECO	4746733
KASSBOHRER	4731012000
M.A.N	90.83112.0144
MAGIRUS-DEUTZ	2498667
NEOPLAN	1001 12 250
RENAULT V.I	5001829866
SCHMITZ	750208
VOLVO	1137882

1300662

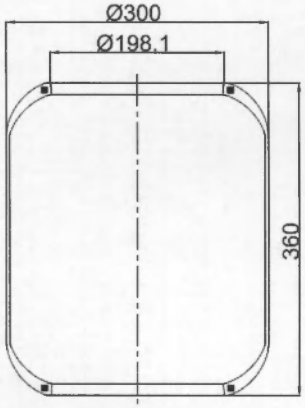

Order No	
100003	
weight(kg)	
1,6	
QIP(pcs)	
30	
Remarks	

CONTITECH	
662 N	
FIRESTONE	
1R1D 355-355	
W01 095 0207/0030	
GOODYEAR	
9007	
PHOENIX	
1 E 32	
AIRTECH	
3662	
CF GOMMA	
1 SC 360-30	
CONNECT	
M 1662	

BPW	02.2002.46.00
DAF	578361
NEOPLAN	AA 10-01-002
SCHMITZ	750209
WARSTEINER	501

AIR EXPERT

1300673

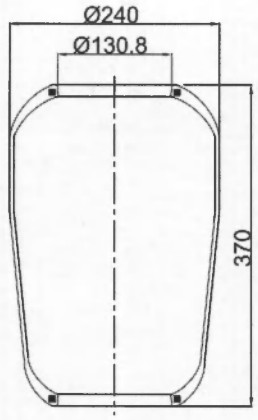

Order No	100004
weight(kg)	1,6
QIP(pcs)	50
Remarks	

CONTITECH
673 N
FIRESTONE
1R1A 370-285
W01 095 0198
GOODYEAR
8012
PHOENIX
1 F 21 A
AIRTECH
3673
CF GOMMA
1 SC 285-22
CONNECT
M 1673

BERTOJA	45402001
DAF	627584
DAIMLER C.	A 383 327 00 01
EVO-BUS	A 383.327.0001
IVECO	4714025
MAGIRUS-DEUTZ	2491566
VOLVO	1611776

1300701

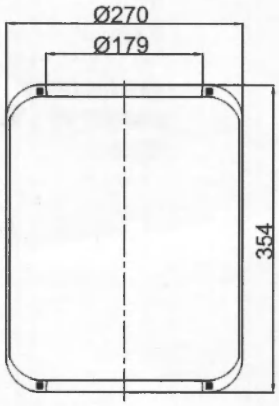

Order No	100005
weight(kg)	1,6
QIP(pcs)	40
Remarks	

CONTITECH
701 N
FIRESTONE
1R3M 340-340
W01 095 0205
GOODYEAR
9006
PHOENIX
1 E 26-1
AIRTECH
3701
CONNECT
M 1701

AUWARTER	B 510040
IKARUS	B 510040

1300706

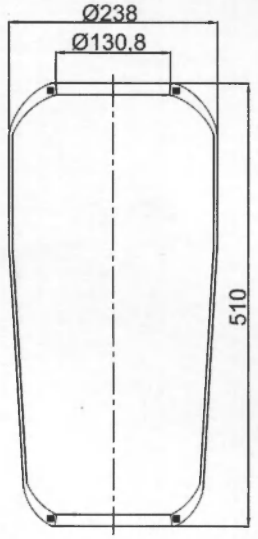

Order No	100006
weight(kg)	1,6
QIP(pcs)	30
Remarks	

CONTITECH
706 N
GOODYEAR
9067
AIRTECH
3706
CONNECT
M 1706

M.A.N	8143610127

1300713

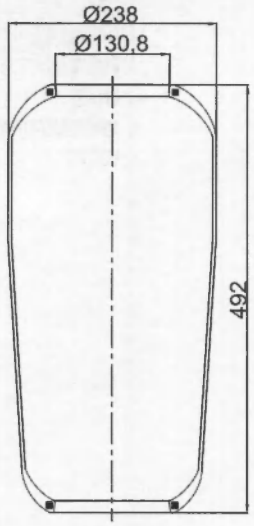

Order No
100007
weight(kg)
1,6
QIP(pcs)
40
Remarks

CONTITECH
713 N
GOODYEAR
9066
AIRTECH
3713
CONNECT
M 1713

VOLVO 6797169

1300715

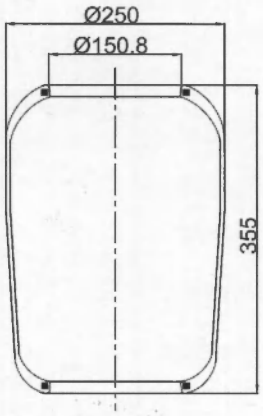

Order No
100008
weight(kg)
1,6
QIP(pcs)
40
Remarks

CONTITECH
715 N
FIRESTONE
1R1C 335-310
W01 095 0087
GOODYEAR
8015
PHOENIX
1 F 25
AIRTECH
3715
CF GOMMA
1 SC 310-16
CONNECT
M 1715

DAF	659561
DAIMLER C.	A 363 328 00 01
IVECO	4456111
M.A.N	81.43601.059/60 61/75/78/81/83/90
MAGIRUS-DEUTZ	4456111
RENAULT V.I	5000786901
VOLVO	6885533

1300716

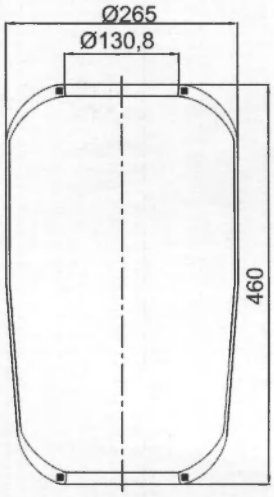

Order No
100009
weight(kg)
1,6
QIP(pcs)
30
Remarks

CONTITECH
716 N
FIRESTONE
1R2A 450-305
W01 095 0145
PHOENIX
1 F 26 B-1
AIRTECH
3716
CF GOMMA
1 SC 300-34
CONNECT
M 1716

M.A.N	81.43601.0039/40
VOLVO	1075290

AIR EXPERT

1300719

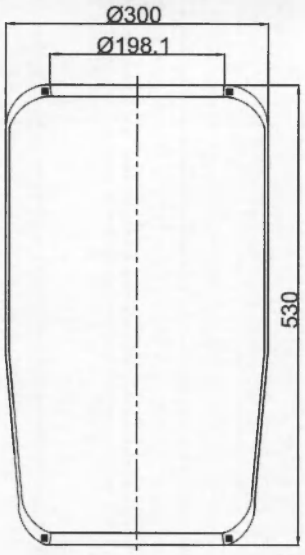

Order No	
100010	
weight(kg)	
1,6	
QIP(pcs)	
20	
Remarks	

CONTITECH
719 N
FIRESTONE
1R2D 530-360
W01 095 0192
GOODYEAR
8118
PHOENIX
1 F 32 B
AIRTECH
3719
CF GOMMA
1 SC 360-43
CONNECT
M 1719

BPW	09.429.38.01.0
DAF	818225
EVO-BUS	4731032000
KASSBOHRER	4731032000
KOGEL	4731032000
NEOPLAN	1001 101 00
SCHMITZ	750215

1300720

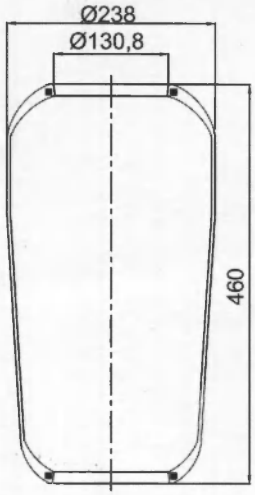

Order No	
100011	
weight(kg)	
1,6	
QIP(pcs)	
40	
Remarks	

CONTITECH
720 N
FIRESTONE
1R2A 460-295
W01 095 0195
GOODYEAR
9008
PHOENIX
1 F 21
AIRTECH
3720
CF GOMMA
1 SC 290-30
CONNECT
M 1720

BPW	02.2002.41.00
DAIMLER C.	A 387 328 01 01
DENNIS	650292/ 8
M.A.N	81.43601.0033/36/37
METRO-CAMMELL	X 664 1056
NEOPLAN	1001 123 00
VOLVO	6797169/1629193

1300727

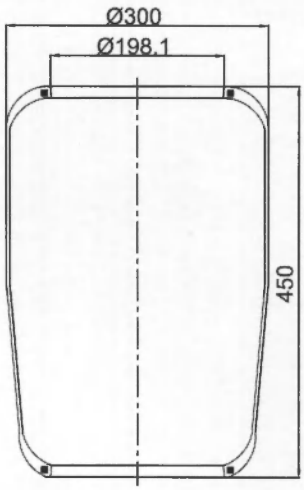

Order No	
100012	
weight(kg)	
1,6	
QIP(pcs)	
25	
Remarks	

CONTITECH
727 N
FIRESTONE
1R2D 460-360
W01 095 0191
GOODYEAR
8117
PHOENIX
1 F 32 A
AIRTECH
3727
CF GOMMA
1 SC 360-34
CONNECT
M 1727

DAFA	638148
GIGANT	166226/196043
M.A.N	81.43601.0056/57/58
	76/79/82/84/91/0114
MERCEDES	307.328.0101
SCHMITZ	750212
VOLVO	1134446

AIR EXPERT

1300728

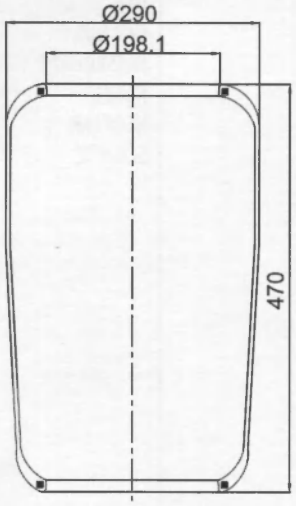

Order No
100013
weight(kg)
1,6
QIP(pcs)
30
Remarks

CONTITECH
728 N
FIRESTONE
1R2D 470-360
W01 095 0419
GOODYEAR
8117
PHOENIX
1 F 32 A-2
AIRTECH
3728
CF GOMMA
1 SC 360-34
CONNECT
M 1728

SCHMITZ 750212

1300737

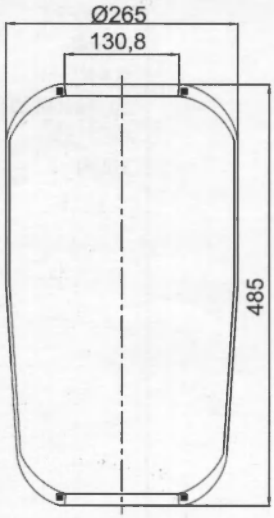

Order No
100014
weight(kg)
1,6
QIP(pcs)
30
Remarks

CONTITECH
737 N
FIRESTONE
1R2A 480-330
W01 095 0211
GOODYEAR
PHOENIX
1 F 26
AIRTECH
3737
CF GOMMA
1 S 320-23
CONNECT
M 1737

CHEREAU VSR U5 00211F
DAIMLER C. A 393 328 01 01
MENARINI 178739

1300746

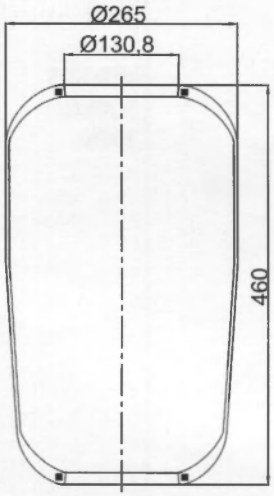

Order No
100015
weight(kg)
1,6
QIP(pcs)
30
Remarks

CONTITECH
746 N
CONNECT
M 1746

DAIMLER C. A 318 328 00 01

1300757

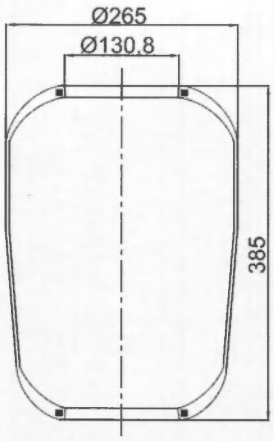

Order No 100016 weight(kg) 1,6 QIP(pcs) 30 Remarks	CONTITECH 757 N FIRESTONE 1R2A 380-305 W01 095 0212 PHOENIX 1 F 26 C AIRTECH 3757 CONNECT M 1757	DAIMLER C. A 363 328 01 01

1300762

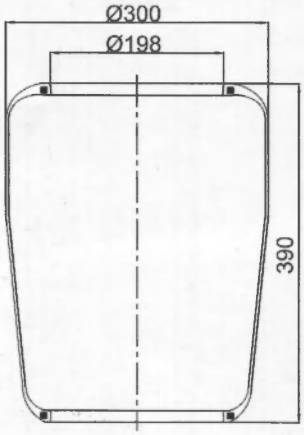

Order No 100017 weight(kg) 1,6 QIP(pcs) 25 Remarks	CONTITECH 762 N FIRESTONE 1R2D 390-360 W01 095 0190 GOODYEAR 9010 PHOENIX 1 F 32 AIRTECH 3762 CF GOMMA 1 SC 360-30 CONNECT M 1762	BPW 09.429.38.02.0 DAF 644425 EVO-BUS 4731013000 GIGANT 161210/209/196035 KASSBOHRER 4731013000 M.A.N 81.43601.0049/52 MERCEDES 382.327.71.01 NEOPLAN 1021 003 00

1300768

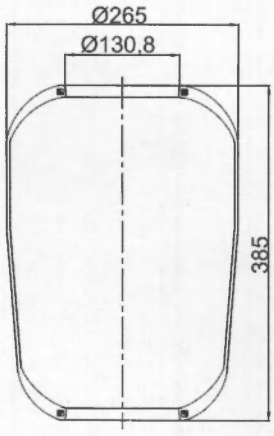

Order No 100018 weight(kg) 1,6 QIP(pcs) 35 Remarks	CONTITECH 768 N FIRESTONE 1R2A 380-330 W01 095 0213 AIRTECH 3768 CONNECT M 1768	RENAULT V.I 5000954175 VOLVO 1612455

1300769

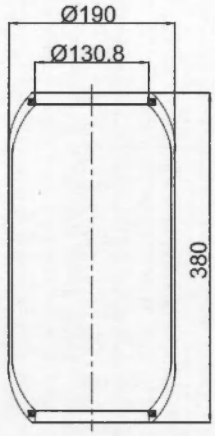

Order No
100019
weight(kg)

QIP(pcs)

Remarks

CONTITECH
769 N
AIRTECH
3769
CONNECT
M 1769

MENARINI 252933
RENAULT V.I 5000805284

1300782

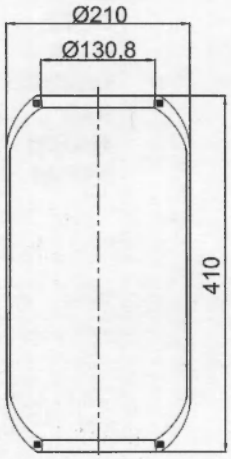

Order No
100020
weight(kg)

QIP(pcs)

Remarks

CONTITECH
782 N
FIRESTONE
1R1A 415-285
W01 095 0197
GOODYEAR
9013
PHOENIX
AIRTECH
3782
CF GOMMA
1 S 270-25 C
CONNECT
M 1782

IVECO 4703904/ 4703972/ 93195986
MERCEDES 382.327.72.01
RENAULT V.I 5000954176

1300786

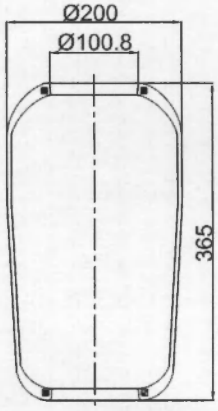

Order No
100021
weight(kg)
1,6
QIP(pcs)
60
Remarks

CONTITECH
786 N
AIRTECH
3786
CONNECT
M 1786

M.A.N 81.43601.0053

1300809

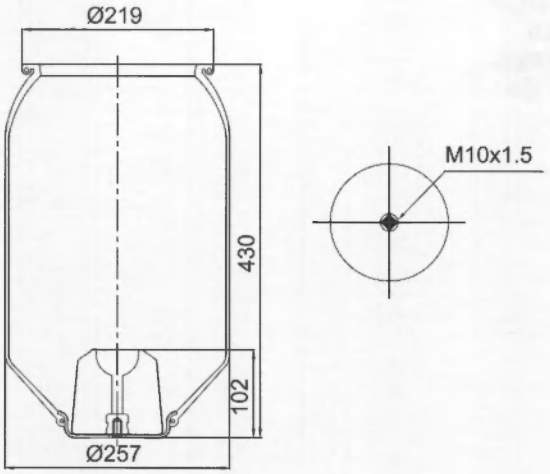

Order No	CONTITECH	IVECO	174932
100022	809 NTB	M.A.N	81.43601.6002
weight(kg)	FIRESTONE	PEGASO	174932
1,6	1T15L-6 M58 0687		
QIP(pcs)	GOODYEAR		
30	12-709		
Remarks	PHOENIX		
	1D23 c-1		
	CF GOMMA		
	1T320SP 89753		
	CONNECT		
	M 1809		

1300810

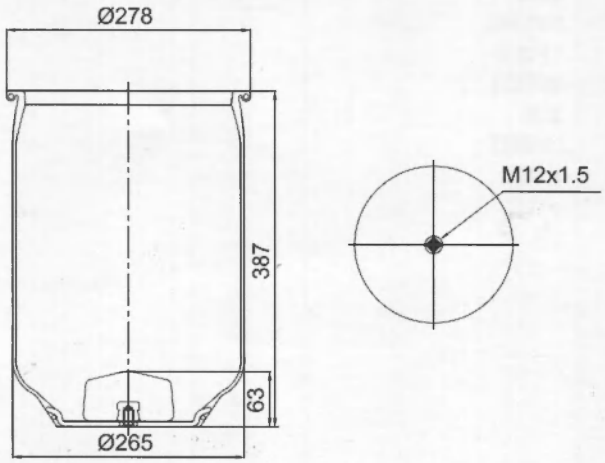

Order No	CONTITECH	M.A.N	81.43601.6019
100104	810 NTB	PEGASO	174933
weight(kg)	FIRESTONE		
1,6	W01 M58 0491		
QIP(pcs)	GOODYEAR		
30	1R14-713		
Remarks	PHOENIX		
	1DK28A4		
	CF GOMMA		
	1T19E-1		
	CONNECT		
	M 1810		

1300817

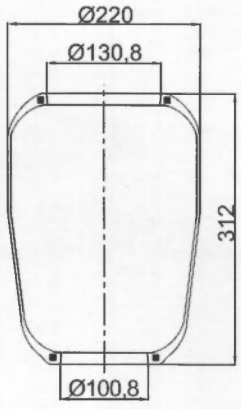

Order No	CONTITECH	RENAULT V.I	5 810 111 355
100997	817 N		
weight(kg)	AIRTECH		
	3817		
QIP(pcs)	CONNECT		
	M 1817		
Remarks			

1300819

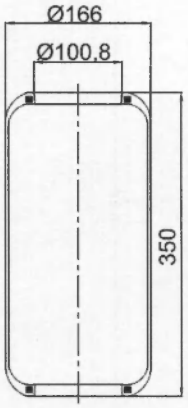

Order No
100024
weight(kg)
1,6
QIP(pcs)
60
Remarks

CONTITECH
819 N
AIRTECH
3819
CONNECT
M 1819

DAIMLER C. A 000 328 01 01

1300838

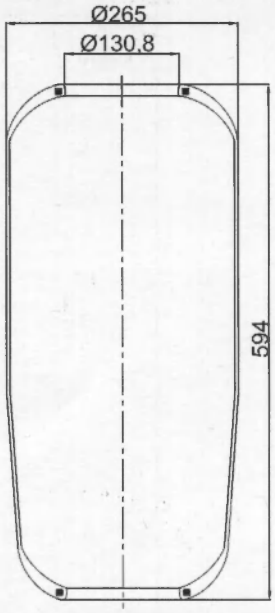

Order No
100025
weight(kg)
1,6
QIP(pcs)
30
Remarks

CONTITECH
838 N
PHOENIX
1 F 26 D
AIRTECH
3838
CONNECT
M 1838

DAIMLER C. A 674 328 00 01

1300873

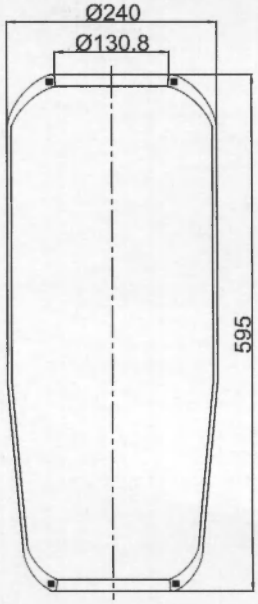

Order No
100069
weight(kg)
1,6
QIP(pcs)
30
Remarks

CONTITECH
873 N
AIRTECH
3873
CONNECT
M 1873

DAIMLER C. A 674 328 01 01

1300876

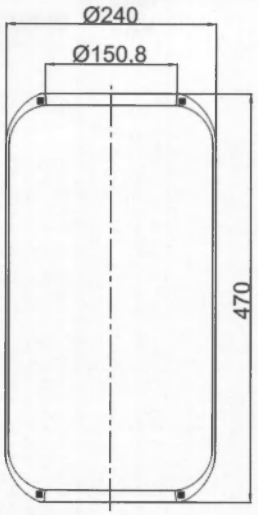

Order No 100049 weight(kg) QIP(pcs) Remarks	CONTITECH 876 N FIRESTONE GOODYEAR 8314 AIRTECH 3876 CONNECT M 1876	RENAULT V.I 5000296816

1300882

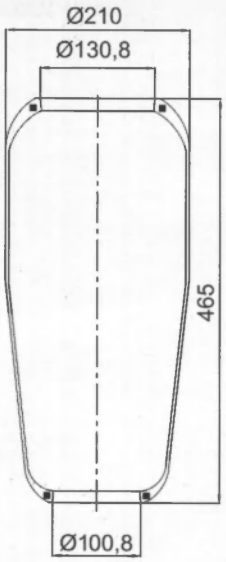

Order No 100026 weight(kg) 1,6 QIP(pcs) 50 Remarks	CONTITECH 882 N1 PHOENIX 1 F 16-2 AIRTECH 3882 CF GOMMA 1 SC 250-28 CONNECT M 1882	DAIMLER C. A 699 328 01 01 M.A.N 81.43601.0065/67/70/92/99

1300883

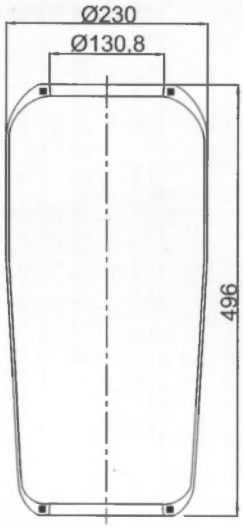

Order No 100027 weight(kg) 1,6 QIP(pcs) 40 Remarks	CONTITECH 883 N1 GOODYEAR 9012 PHOENIX 1 F 21 C-2 AIRTECH 3883 CF GOMMA 1 SC 250-29 CONNECT M 1883	M.A.N 81.43601.0071/72/110/128 VOLVO 1082085

1300884

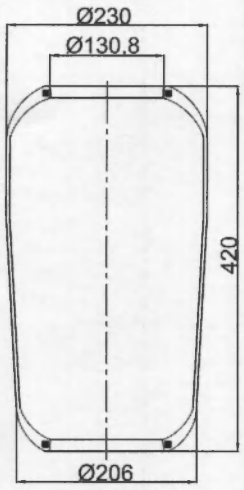

Order No
100028
weight(kg)
1,6
QIP(pcs)
50
Remarks

CONTITECH
884 N
GOODYEAR
9002
PHOENIX
1 F 20 A
AIRTECH
3884
CF GOMMA
1 SC 270-28
CONNECT
M 1884

DAIMLER C. A 658 328 00 01
IVECO 8188539 Eurotech
M.A.N 81.43601.0066/68/69/106/108

1300896

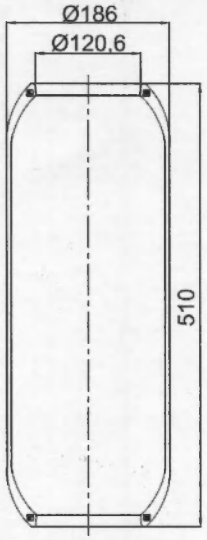

Order No
100029
weight(kg)
1,6
QIP(pcs)
30
Remarks

CONTITECH
896 N
FIRESTONE
1R1J 520-285 FF
W01 095 0245
PHOENIX
2 E 18 A
AIRTECH
3896
CF GOMMA
1 S 285-18
CONNECT
M 1896

SCANIA + SCANIA BUSSAR 411627

1300897

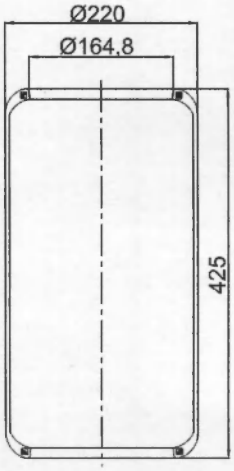

Order No
100030
weight(kg)
1,6
QIP(pcs)
30
Remarks

CONTITECH
897 N
FIRESTONE
1R1K 440-320 FF
W01 095 0229
GOODYEAR
8028
PHOENIX
2 E 23
AIRTECH
3897
CF GOMMA
1 S 320 30
CONNECT
M 1897

PEGASO 794686
SCANIA + SCANIA. BUSSAR 411622
411623
402315

1300916

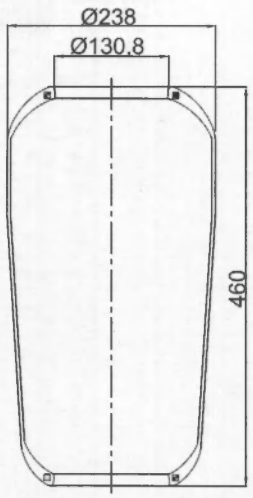

Order No
100031
weight(kg)
1,6
QIP(pcs)
40
Remarks

CONTITECH
916 N1
GOODYEAR
9015
PHOENIX
1 F 21 C-5
AIRTECH
3916
CONNECT
M 1916

M.A.N 81.43601.095/97/0102/105/100/126

1300921

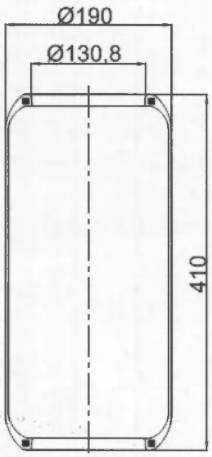

Order No
100995
weight(kg)
QIP(pcs)
Remarks

CONTITECH
921 N
FIRESTONE
1R1A 415-260
W01 095 0226
GOODYEAR
8043
PHOENIX
1 E 18
AIRTECH
3921
CF GOMMA
1 S 285-23
CONNECT
M 1921

RENAULT V.I 5000288982

1300927

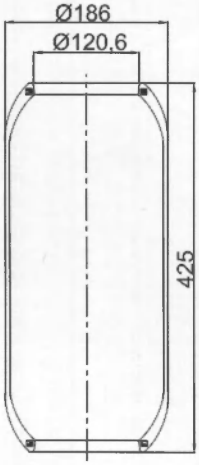

Order No
100032
weight(kg)
1,6
QIP(pcs)
60
Remarks

CONTITECH
927 N
FIRESTONE
1R1J 415-285 FF
W01 095 0244
GOODYEAR
8037
PHOENIX
2 E 18 B
AIRTECH
CONNECT
M 1927

DENNIS 611896/ 12
LEYLAND AAU2542
VOLVO 3116354/ AAU 2542

1300928

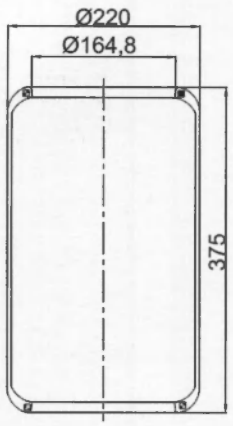

Order No
100033
weight(kg)
1,6
QIP(pcs)
50
Remarks

CONTITECH
928 N
FIRESTONE
1R1K 380-320 FF
W01 095 0228
GOODYEAR
8042
PHOENIX
2 E 23 A
AIRTECH
3928
CONNECT
M 1928

IVECO	6453741
LEYLAND	AAU2544
SCANIA + SCANIA BUSSAR	434932
VOLVO	3116983

1300936

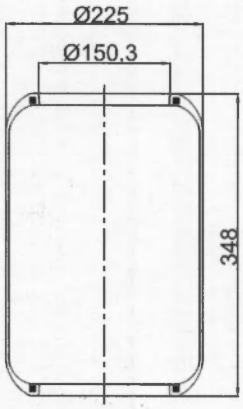

Order No
100994
weight(kg)

QIP(pcs)

Remarks

CONTITECH
936 N
AIRTECH
3936
CONNECT
M 1936

RENAULT V.I	5000819370

1300943

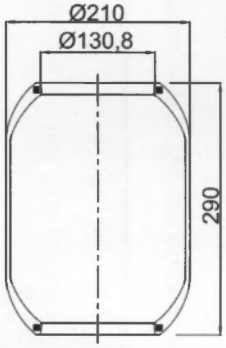

Order No
100034
weight(kg)
1,6
QIP(pcs)
50
Remarks

CONTITECH
943 N
FIRESTONE
1R1A 260-285
W01 095 0189
GOODYEAR
9001
AIRTECH
3943
CF GOMMA
1 S 285-18
CONNECT
M 1943

INBUS	5001051
IVECO	6144040

1300944

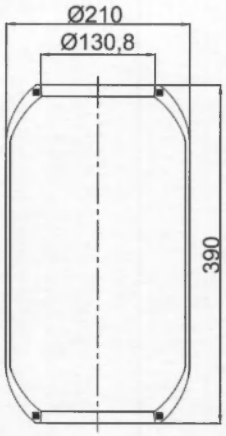

Order No	CONTITECH
100035	944 N
weight(kg)	FIRESTONE
1,6	1R1A 370-285
QIP(pcs)	W01 095 0198
50	GOODYEAR
Remarks	8012
	AIRTECH
	3944
	CF GOMMA
	1 S 285-22
	CONNECT
	M 1944

DAF	627584
INBUS	4890001
IVECO	8188526
	Eurotech
MENARINI	178623
PORTESI	700 176
SCANIA BUSSAR (South America)	523229

1300945

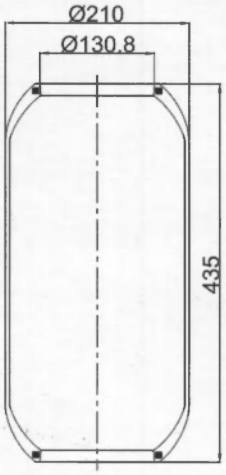

Order No	CONTITECH
100036	945 N
weight(kg)	FIRESTONE
1,6	1R1A 460-290
QIP(pcs)	W01 095 0063
50	GOODYEAR
Remarks	9014
	PHOENIX
	1 E 21-C
	AIRTECH
	3945
	CF GOMMA
	1 S 285-25
	CONNECT
	M 1945

IVECO	4716989
MENARINI	178741

1300975

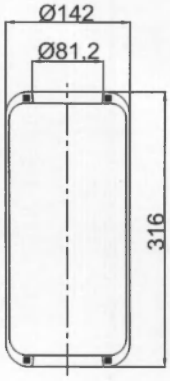

Order No	CONTITECH
100048	975 N
weight(kg)	FIRESTONE
	1R 1T 320 195
QIP(pcs)	W01 095 0437
	GOODYEAR
Remarks	AIRTECH
	3975
	CONNECT
	M 1975

EVO-BUS	A 699 328 01 01

1301421

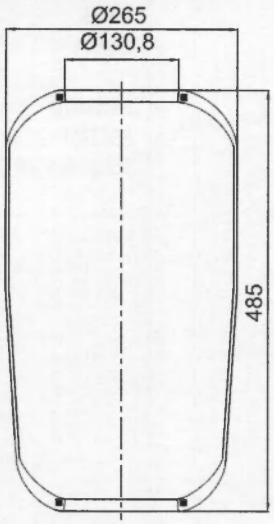

Order No
100037
weight(kg)
1,6
QIP(pcs)
30
Remarks

CONTITECH
1421 N
AIRTECH
31421
CONNECT
M 11421

VOLVO 1075291

1301720

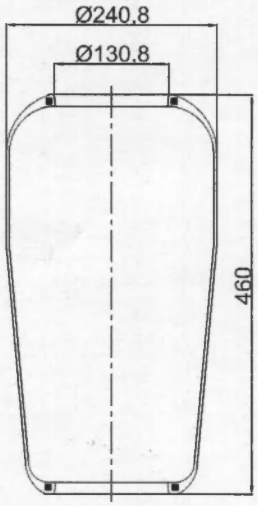

Order No
100992
weight(kg)
QIP(pcs)
Remarks

CONTITECH
1720 N
AIRTECH
31720
CONNECT
M 11720

DAIMLER C. A 655 327 00 01

1301885

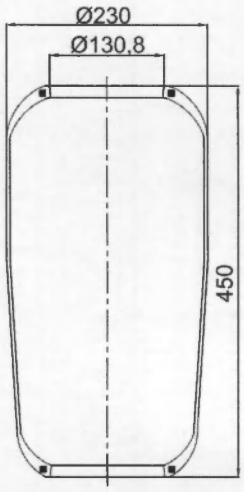

Order No
100038
weight(kg)
1,6
QIP(pcs)
40
Remarks

CONTITECH
1885 N1
FIRESTONE
1R2A445 280
W01 095 0429
GOODYEAR
9003
PHOENIX
1F 20 B-1
AIRTECH
31885
CF GOMMA
1 SC 270-28
CONNECT
M 11885

IVECO 98478799
M.A.N 81.43601.0150/0125/0140/0150

1301888

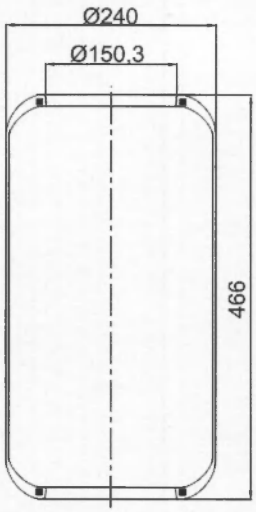

Order No 100039	CONNECT M 11888	

1301924

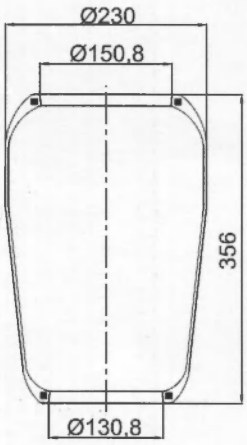

Order No 100040 weight(kg) QIP(pcs) Remarks	CONTITECH 1924 N1 AIRTECH 31924 CONNECT M 11924	VOLVO 1075366

1300453

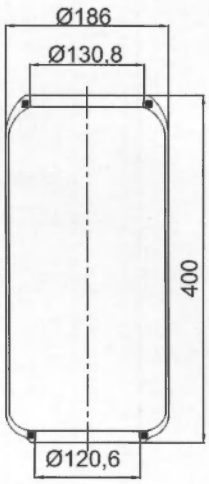

Order No 100889 weight(kg) 1,6 QIP(pcs) 50 Remarks	CONTITECH FIRESTONE 1R4U 395 260 095 0453 AIRTECH 31277 CONNECT M 190453	VOLVO 3111277

1301404

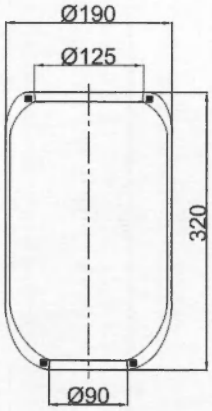

Order No
100041
weight(kg)
1,6
QIP(pcs)
50
Remarks
only bellow

PHOENIX
1 G 12
CONNECT
M 1404

1301525

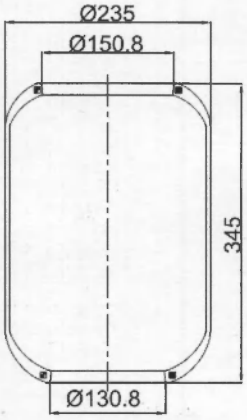

Order No
100042
weight(kg)
1,6
QIP(pcs)
50
Remarks

CONTITECH
RZ 415-25
FIRESTONE
1R5P 345-290
W01 095 0381
GOODYEAR
9004
PHOENIX
2 G 20
AIRTECH
3415-25
CF GOMMA
1 S 280-25
CONNECT
M 141525

VOLVO 3027271

1301528

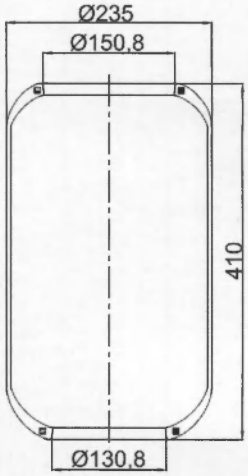

Order No
100043
weight(kg)
1,6
QIP(pcs)
50
Remarks

CONTITECH
RZ 415-28
FIRESTONE
1R5P 410-290
W01 095 0382
GOODYEAR
9005
PHOENIX
2 G 20 A
AIRTECH
3415-28
CF GOMMA
1 S 280-28
CONNECT
M 141528

VOLVO 3027272

1305025

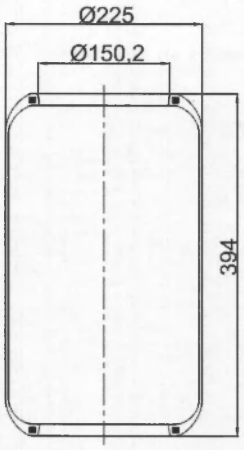

Order No
100990
weight(kg)
1,6
QIP(pcs)
50
Remarks

CONTITECH
RZ 450-25
PHOENIX
1 E 23
AIRTECH
3450-25
CF GOMMA
1 S 300-27
CONNECT
M 145025

1301415

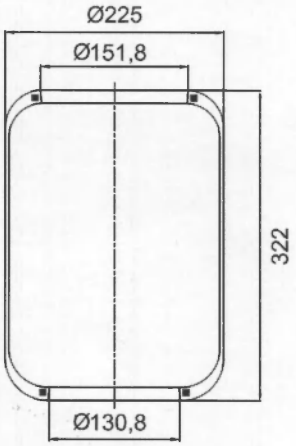

Order No
100023
weight(kg)
3.8
QIP(pcs)
30
Remarks

CONTITECH
1415 N
CONNECT
M 11415

1301774

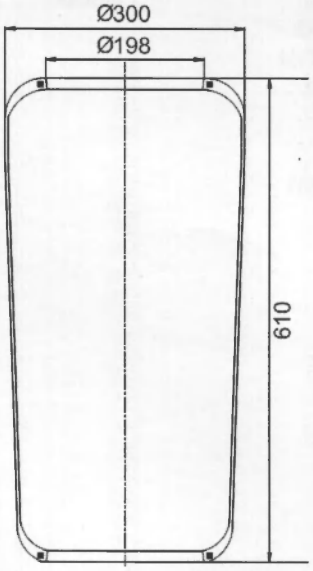

Order No
100044
weight(kg)
4.1
QIP(pcs)
20
Remarks

CONTITECH
1774 N
AIRTECH
31774
CONNECT
M 11774

1600724-CS

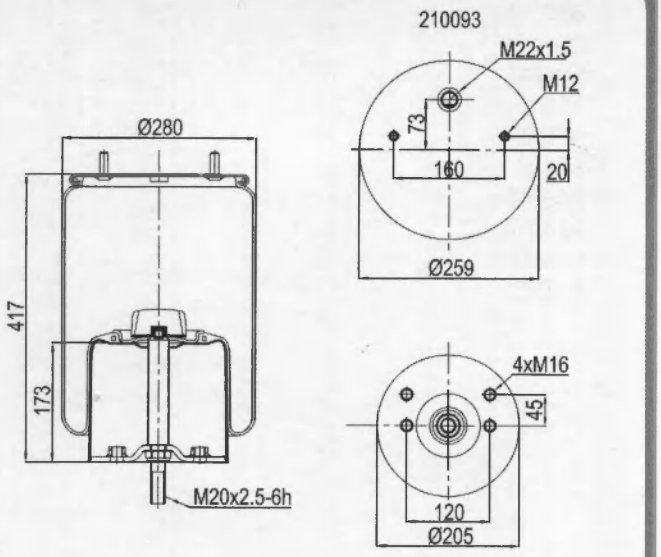

Order No 160187 weight(kg) 12.5 QIP(pcs) 30 Remarks	GOODYEAR 1R 11-711 AIRTECH 3724 K CONNECT MD 1724-K	GIGANT	3053

1600725-2CS

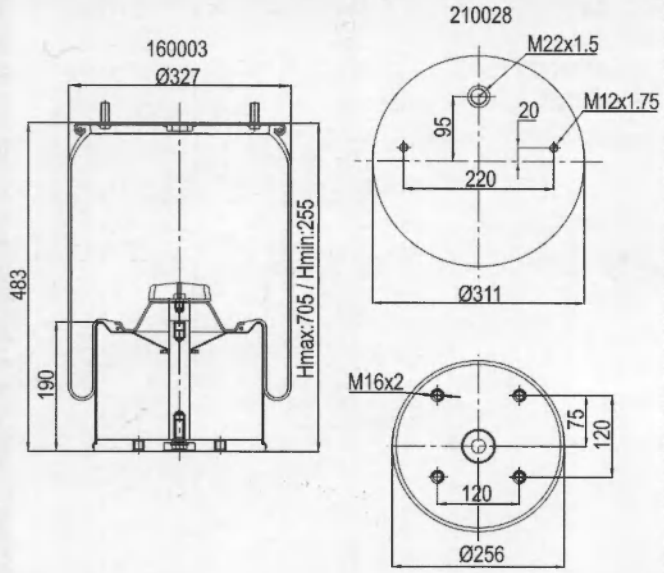

Order No 160002 weight(kg) 18 QIP(pcs) 20 Remarks	FIRESTONE 1T 66 F-10.8 W01 M58 8610 GOODYEAR 1R 14 756 CONNECT MD 1725-K02	GIGANT	166217

1600725-3CS

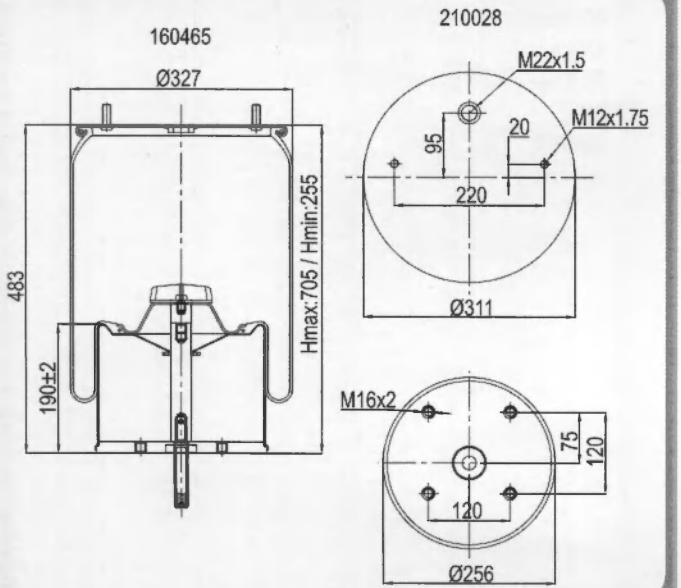

Order No 160001 weight(kg) 18 QIP(pcs) 20 Remarks	FIRESTONE 1T 66 F-10.8 W01 M58 8969 GOODYEAR 1R 14 747 CONNECT MD 1725-K03	GIGANT	166252

AIR EXPERT

1600810

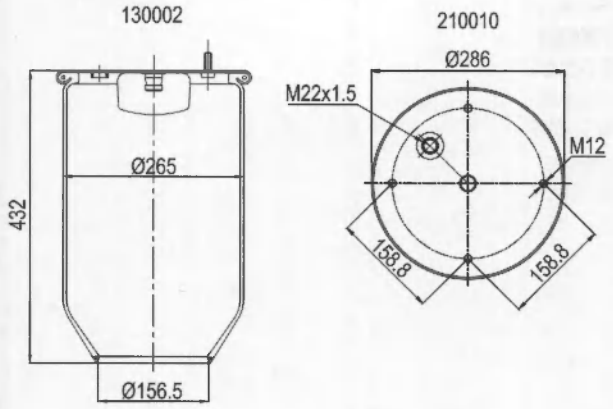

Order No	CONTITECH
130002	810 MB/0
weight(kg)	PHOENIX
5.27	1 D 28 A
QIP(pcs)	AIRTECH
22	3810 P
Remarks	CONNECT
	MD 1810

1600810-CS

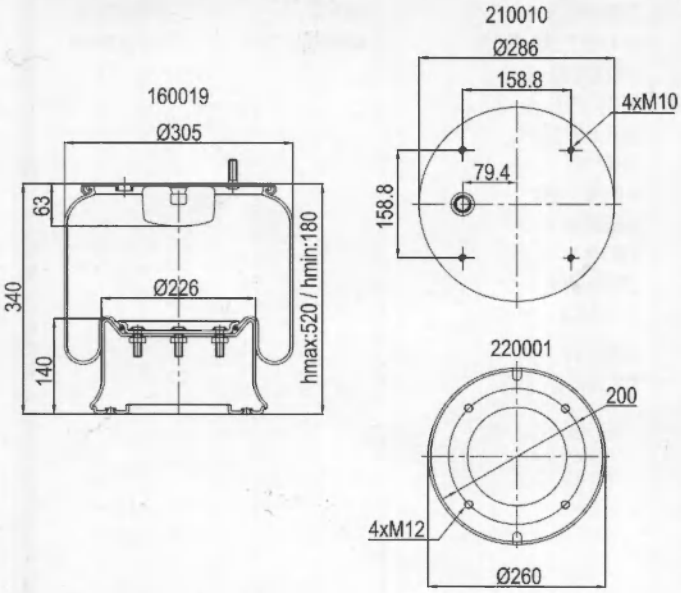

Order No	CONTITECH
160004	810 MB
weight(kg)	FIRESTONE
11.2	1T 19 L-7
QIP(pcs)	W01 M58 6345
22	GOODYEAR
Remarks	1 R 14-059
	PHOENIX
	1 D 28 A-2
	AIRTECH
	3810 K
	CF GOMMA
	1 T 19 E-1
	CONNECT
	MD 1810-K

BERTOJA	45402002
GRANNING	15635
HENDRICKSON	B 2065/ Y506243
	Y506201
NEWAY	211 586
R.O.R / MERITOR	21215632
	21208082
	17204517
RENAULT V.I	5000452939
S.A.F	2.228.0002.00
SAMRO	2500008
T.E.C	506243/ 01
WEWELER	US874313
	US07337
YORK	785168

1600810-CP

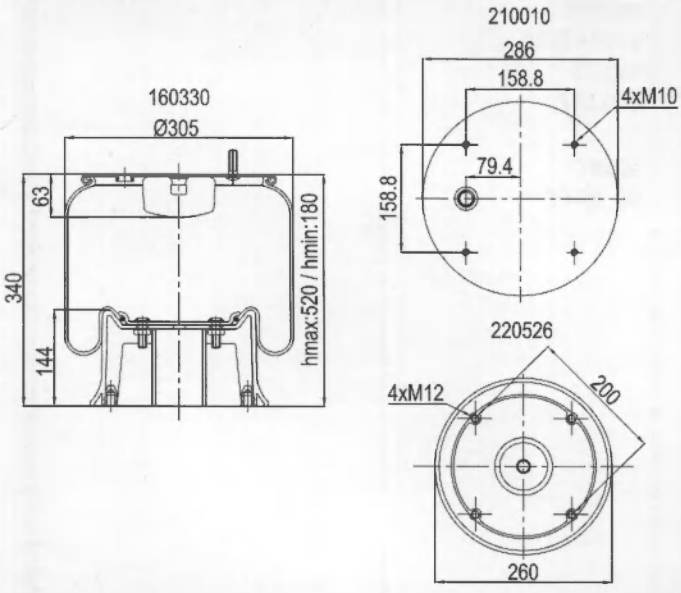

Order No	FIRESTONE
160005	1T19L-7
weight(kg)	W01 M58 8775
10	CONNECT
QIP(pcs)	MD 1810-KP
22	
Remarks	

AIR EXPERT

1600811

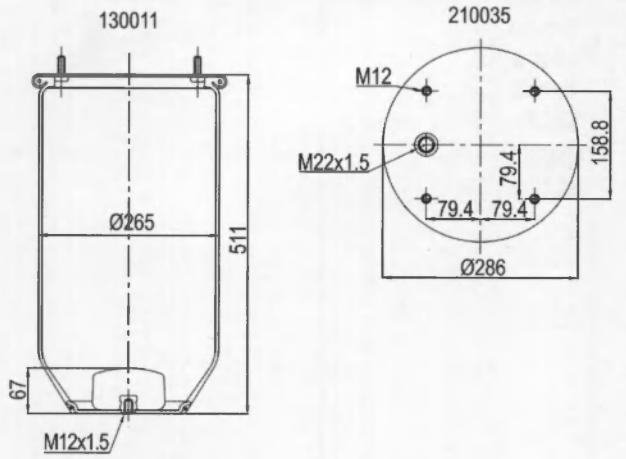

Order No
130003
weight(kg)
5.2
QIP(pcs)
22
Remarks

FIRESTONE
1T 19 L-11
GOODYEAR
1 R 14-719
PHOENIX
1 D 28 B
AIRTECH
3811-02 P
CONNECT
MD 1811

1600811-CS

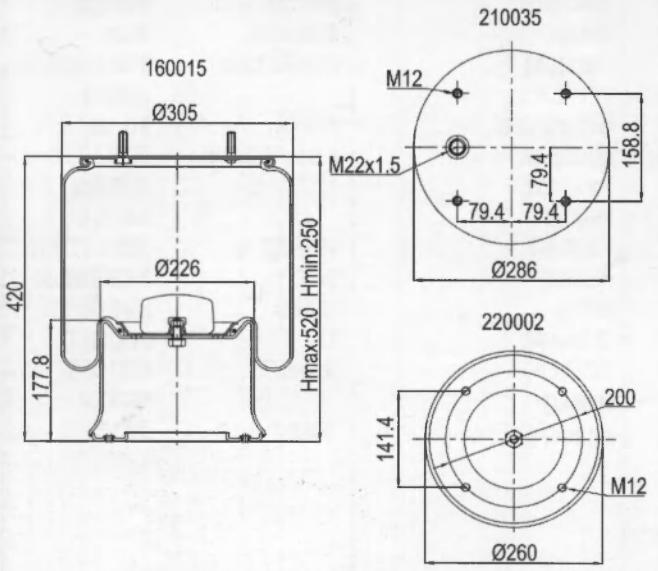

Order No
160008
weight(kg)
11.65
QIP(pcs)
22
Remarks

CONTITECH
811 MB / 811 M16 K1
FIRESTONE
1T 19 L-11
W01 M58 6334
PHOENIX
1 D 28 B-2E2
AIRTECH
3811 K
CF GOMMA
1 T 19 E-2
CONNECT
MD 1811-K

DAF 0526823/ A
RENAULT V.I 5000745918

1600811-2

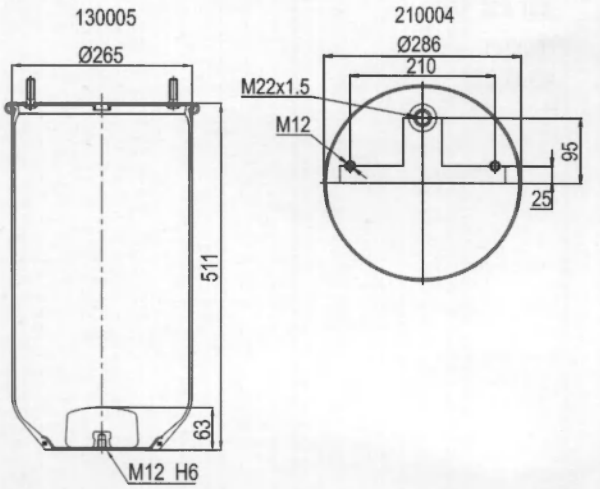

Order No
130005
weight(kg)
4.91
QIP(pcs)
22
Remarks

PHOENIX
1D 28 B 10 NP
AIRTECH
3811-04 P

CONNECT
MD 1811-02

1600811-2CS

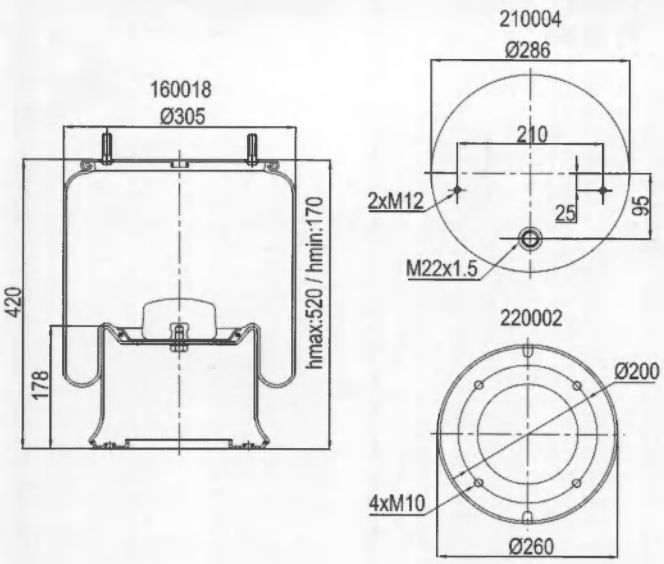

Order No	GOODYEAR
160018	1 R 14-728
weight(kg)	PHOENIX
11.65	1 D 28 B-10
QIP(pcs)	AIRTECH
22	3811 K06
Remarks	CONNECT
	MD 1811-K02

1600811-3

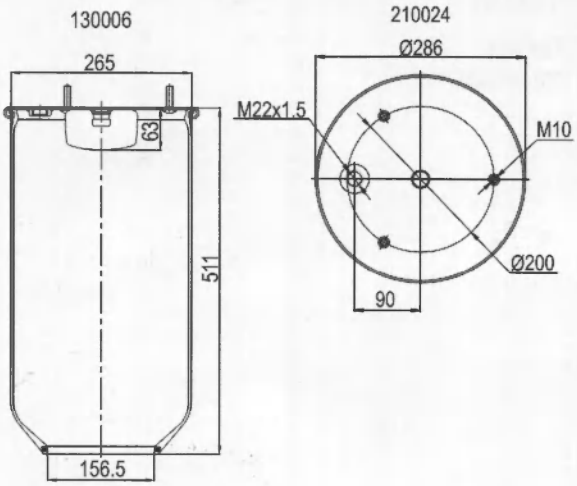

Order No	FIRESTONE
130006	1T 19 F-11
weight(kg)	W01 M58 6359
5.49	AIRTECH
QIP(pcs)	3811-06 P
22	CONNECT
Remarks	MD 1811-03

1600811-3CS

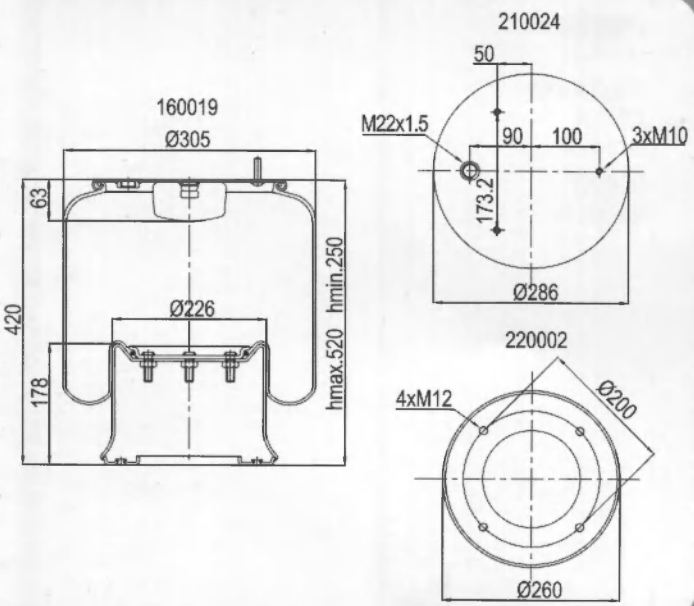

Order No	GOODYEAR
160011	1 R 14-718
weight(kg)	CF GOMMA
12.6	1 T 19 E-2
QIP(pcs)	CONNECT
22	MD 1811-K03
Remarks	

1600811-4

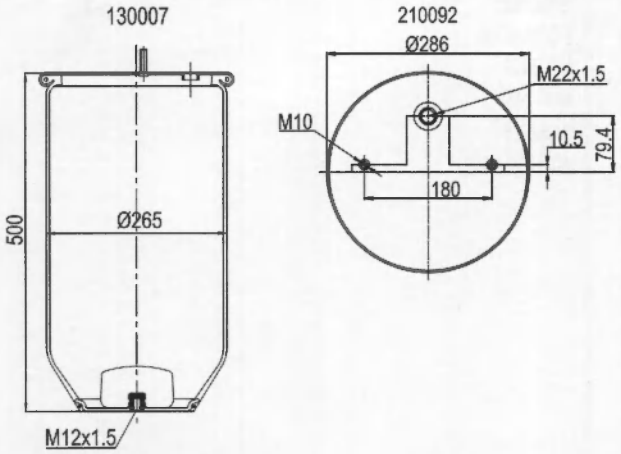

Order No
130007

CONNECT
MD 1811-04

1600811-5CS

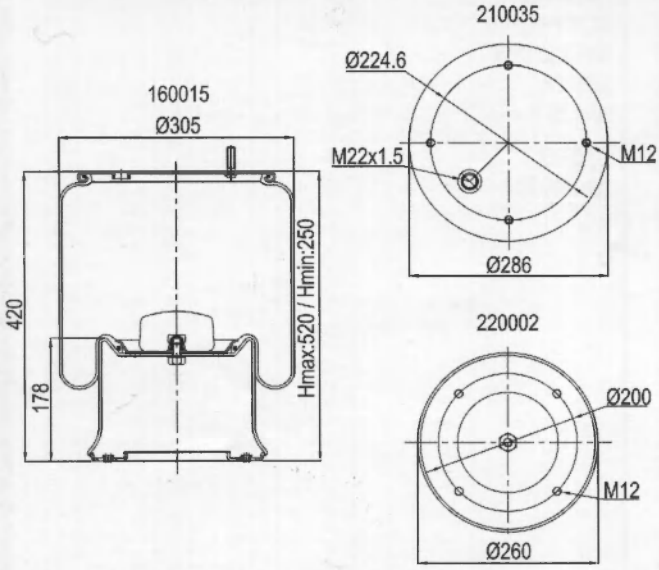

Order No
160012
weight(kg)
11.65
QIP(pcs)
22
Remarks

GOODYEAR
1 R 14-717

CONNECT
MD 1811-K05

1600811-16

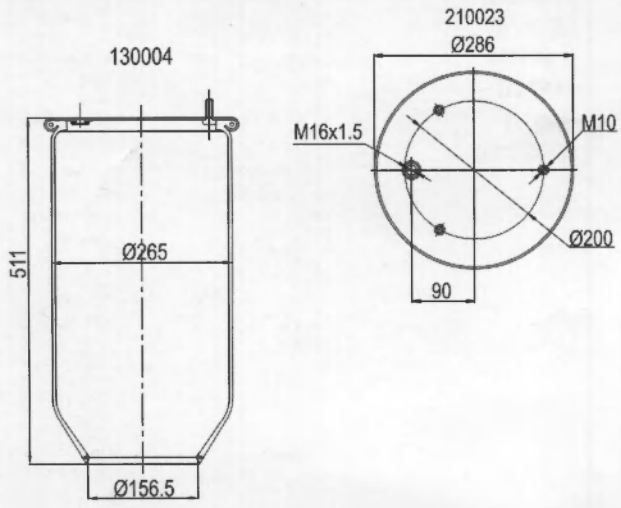

Order No
130004
weight(kg)
4.8
QIP(pcs)
22
Remarks

FIRESTONE
1T 19 F-11
W01 M58 6359
AIRTECH
3811-03 P

CONNECT
MD 1811-16

1600811-16CS

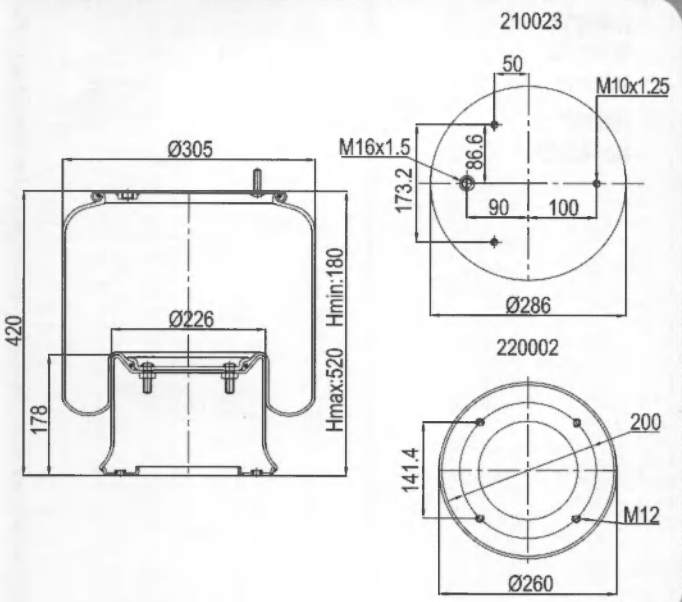

Order No	CONTITECH
160009	811 M 16 K1
weight(kg)	FIRESTONE
11.5	1T 19 L-11
QIP(pcs)	W01 M58 6334
22	GOODYEAR
Remarks	1 R 14-719
	PHOENIX
	1 D 28 B-7
	AIRTECH
	3811-07K
	CONNECT
	MD 1811-K16

1600813

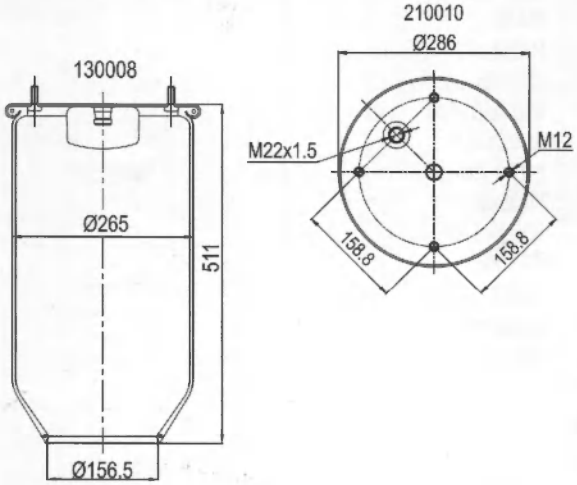

Order No	CONTITECH
130008	813 MB/0
weight(kg)	FIRESTONE
5.7	1T 19 L-11
QIP(pcs)	AIRTECH
22	3813 P
Remarks	CONNECT
	MD 1813

1600813-CS

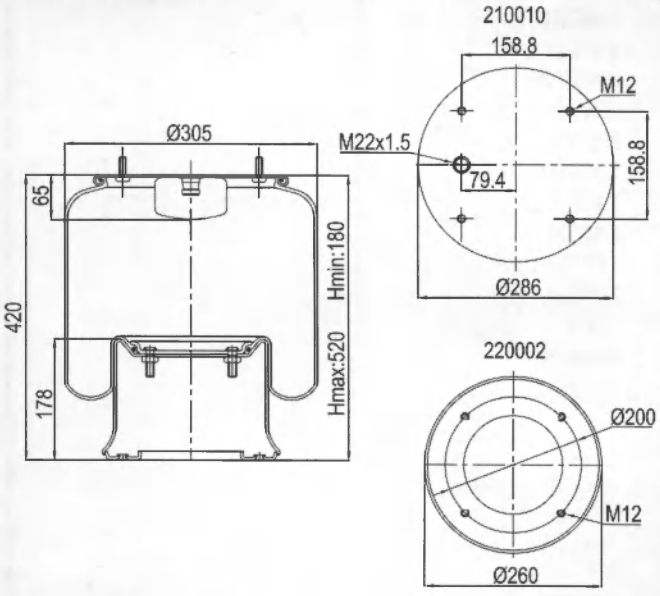

Order No	CONTITECH
160013	813 MB
weight(kg)	FIRESTONE
11.6	1T 19 L-11
QIP(pcs)	W01 M58 6364
22	GOODYEAR
Remarks	1 R 14-061
	PHOENIX
	1 D 28 B-2 E2
	AIRTECH
	3813 K
	CF GOMMA
	1 T 19 E-2
	CONNECT
	MD 1813-K

BARTOLETTI	91619005
BATTAGLINO	2211400
CARDI	58051000
DAF	388491
E.R.F.	143908-3
EVO-BUS	4731030000
FRUEHAUF	003615E
GRANNING	15634
HENDRICKSON	B 2063/ Y505859/ 01
KASSBOHRER	4731033000
NEWAY	22 282
R.O.R / MERITOR	21215633
RENAULT V.I	5010130925
S.A.E	8403/ 102
S.A.F	2.229.0003.00
SAMRO	2500009
T.E.C	505859/ 01
TERBERG	21071483
TITAN	91687700000
TRAILOR	0036158E/ 650234Y
VIBERTI	128147122
WEWELER	US87408/ US07345
YORK	785170

1600813-CP

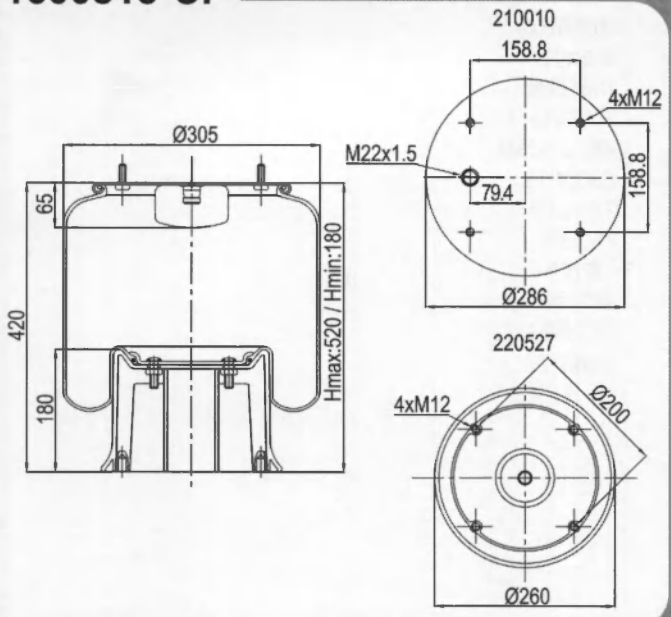

Order No	FIRESTONE
160014	1T 19 L-11
weight(kg)	W01 M58 6339
9	CONNECT
QIP(pcs)	MD 1813-KP
22	
Remarks	

1600836-1

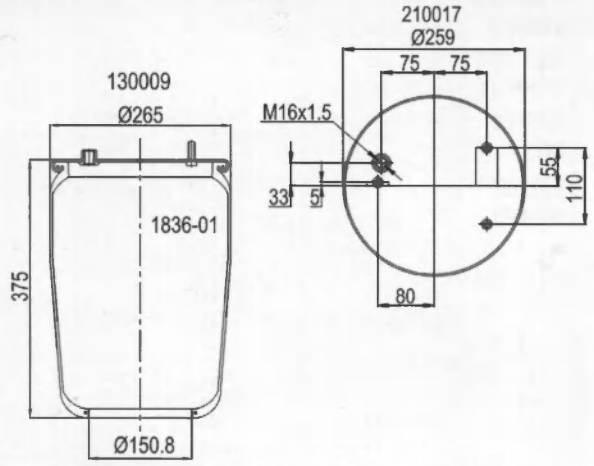

Order No	CONTITECH
130009	836 M
weight(kg)	FIRESTONE
4	1T 17 AR-4.5
QIP(pcs)	W01 M58 0776
30	GOODYEAR
Remarks	1 R 12-700
	PHOENIX
	1DF 25-1 NP
	AIRTECH
	3836 P
	CONNECT
	MD 1836-01

1600836-1CS

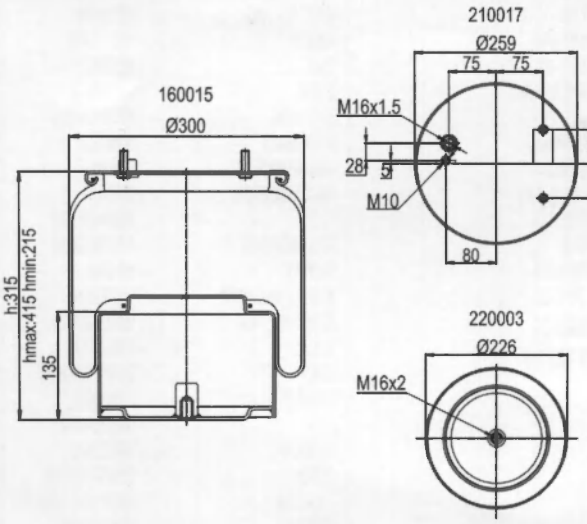

Order No	CONTITECH
160015	836 M K1
weight(kg)	FIRESTONE
8.1	1T17 AR - 4.5.
QIP(pcs)	W01 M58 8722
25	GOODYEAR
Remarks	1 R 12-712
	PHOENIX
	1 DF 25-11
	AIRTECH
	3636 K
	CONNECT
	MD 1836-K01

1600836-2

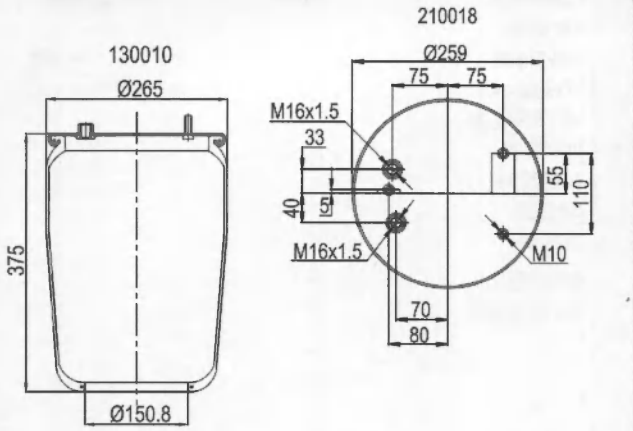

Order No	CONTITECH
130010	836 M 2
weight(kg)	FIRESTONE
4	1T 17 AR-4.5
QIP(pcs)	W01 M58 0777
30	GOODYEAR
Remarks	1 R 12-710
	PHOENIX
	1DF 25-3 NP
	AIRTECH
	3836-02 P
	CONNECT
	MD 1836-02

1600836-2CS

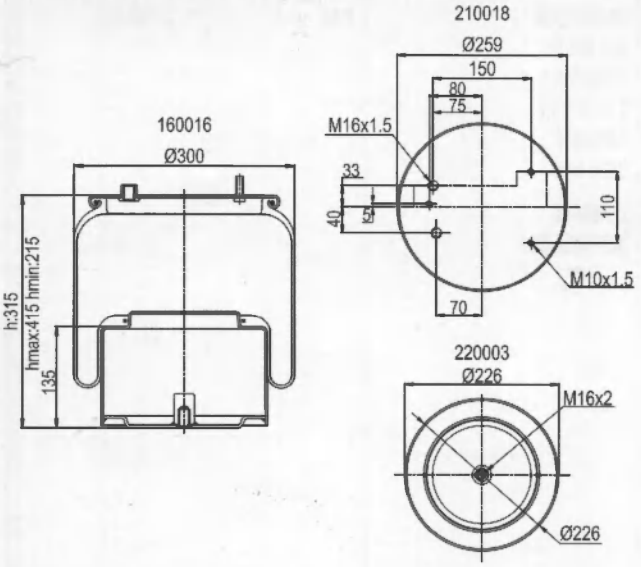

Order No	CONTITECH
160016	836 M2 K1
weight(kg)	FIRESTONE
8.2	1T17 AR - 4.5.
QIP(pcs)	W01 M58 8721
25	GOODYEAR
Remarks	1 R 12-711
0	PHOENIX
	1 DF 25-13
	AIRTECH
	3636 K02
	CONNECT
	MD 1836-K02

1600836-4

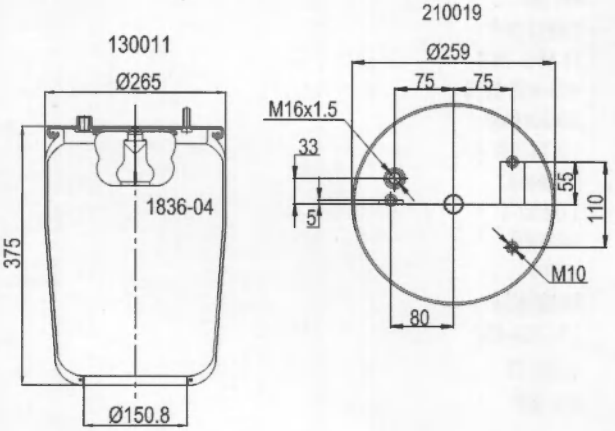

Order No	CONTITECH
130011	836 MB
weight(kg)	FIRESTONE
4.3	1T 17 AR-4.5
QIP(pcs)	W01 M58 0775
30	PHOENIX
Remarks	1DF 25-4 NP
	AIRTECH
	3836-01
	CONNECT
	MD 1836-04

AIR EXPERT

1600836-4CS

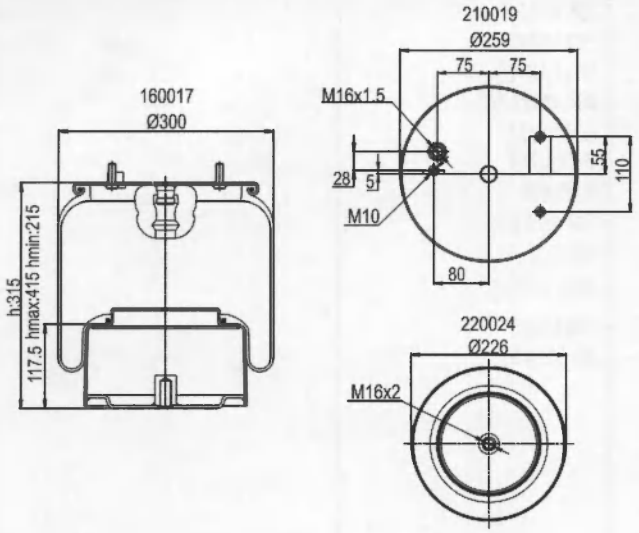

Order No
160017
weight(kg)
8.3
QIP(pcs)
25
Remarks

CONTITECH
836 MB K4
FIRESTONE
1T17 AR - 4.5.
W01 M58 8705
PHOENIX
1 DF 25-14
AIRTECH
3636 K04
CONNECT
MD 1836-K04

DAF 377498

1600836-6CS

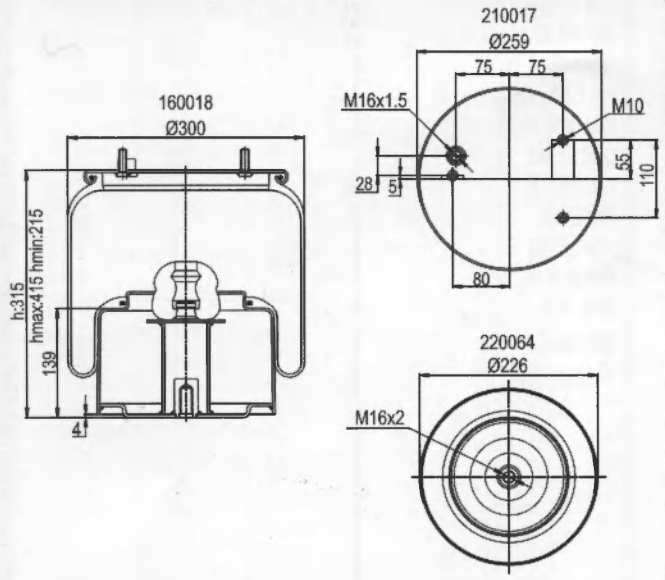

Order No
160018
weight(kg)
9
QIP(pcs)
25
Remarks

CONTITECH
836 MB K6
PHOENIX
1 DF 25-15
AIRTECH
3636 K06
CONNECT
MD 1836-K06

DAF 526651

1600881

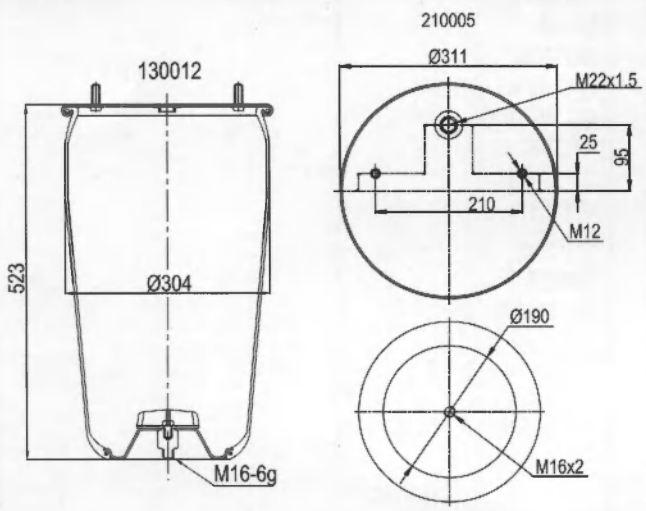

Order No
130012
weight(kg)
7
QIP(pcs)
20
Remarks

CONTITECH
881 MB
FIRESTONE
1T 66 D-10.8
W01 M58 8978
GOODYEAR
1 R 14-708
PHOENIX
1 DK 32-1
AIRTECH
3881 P
CF GOMMA
1 TC 360-45
CONNECT
MD 1881

BPW 05.429.40.0.10

AIR EXPERT

1600881-CS

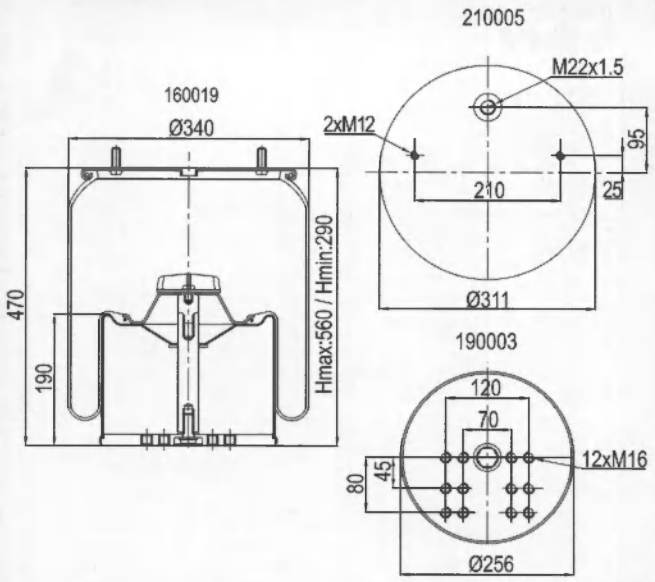

Order No 160019 weight(kg) 17.3 QIP(pcs) 20 Remarks	FIRESTONE 1T 66D-10.8 W01 M58 8966 GOODYEAR 1 R 14-703 AIRTECH 3881 K01 CF GOMMA 1TC360-45 CONNECT MD 1881-K	

1600881-CP

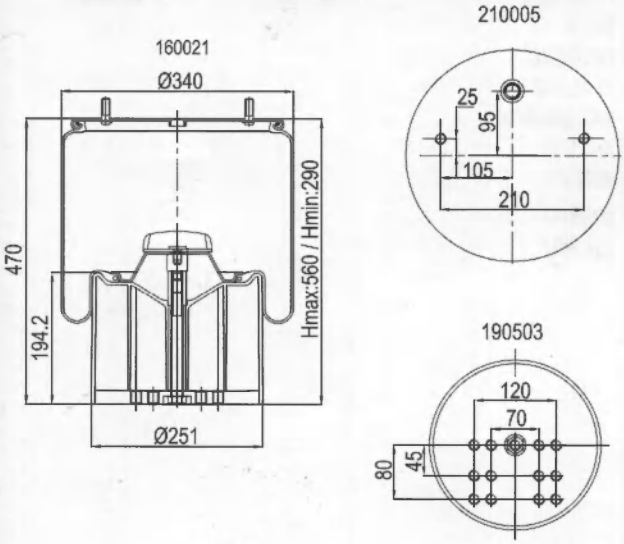

Order No 160021 weight(kg) 13.3 QIP(pcs) 20 Remarks	FIRESTONE 1T 66D-10.8 W01 M58 8966 AIRTECH 3881 KP01 CONNECT MD 1881-KP	BPW 05.429.40.08.1

1600881-1CS

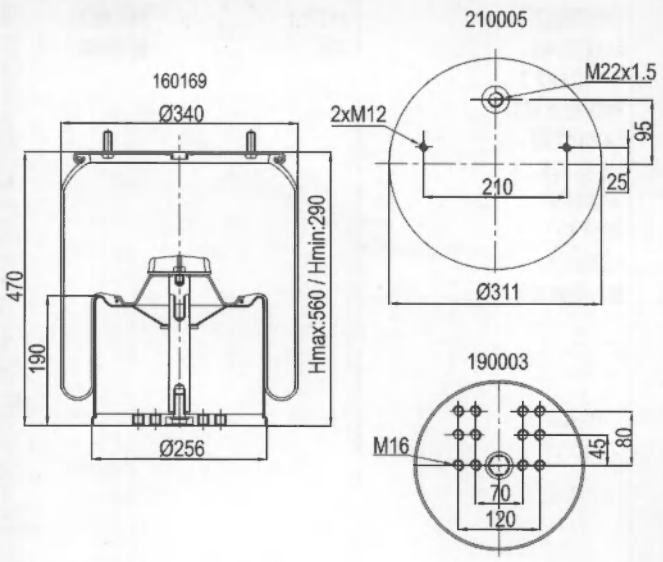

Order No 160169 weight(kg) 17.3 QIP(pcs) 20 Remarks	CONNECT MD 1881-K01	BPW 05.429.43.51.0

1600881-1CP

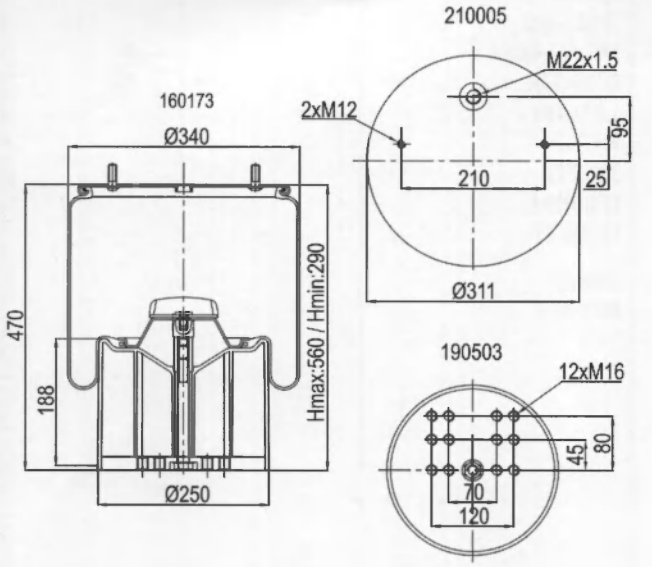

Order No	CONNECT	
160173	MD 1881-KP01	
weight(kg)		
13.3		
QIP(pcs)		
20		
Remarks		

1600887

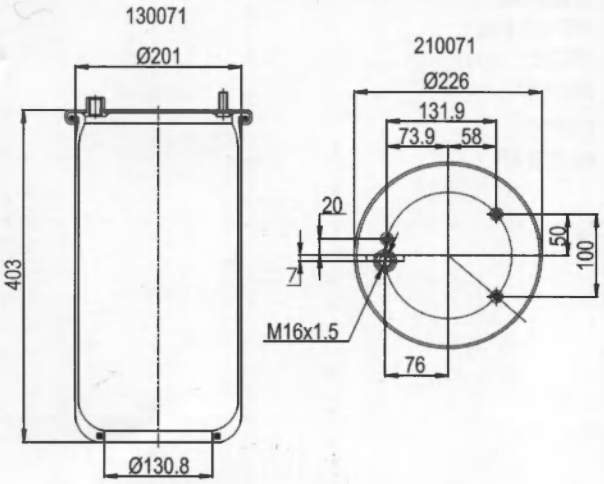

Order No	CONTITECH	FRUEHAUF	0513983
130071	887 M		
weight(kg)	FIRESTONE		
3.1	1T 15 LNR-3		
QIP(pcs)	W01 M58 0780		
30	AIRTECH		
Remarks	3887 P		
	CONNECT		
	MD 1887		

1600887-CS

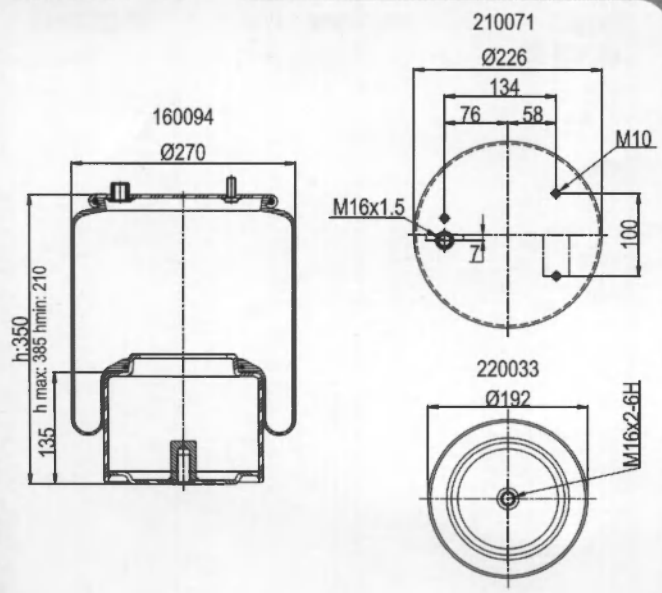

Order No	CONTITECH	ACERBI	887 MK1
160094	FIRESTONE	DAF	0513983
weight(kg)	1 T 15 LNR 3		
6.6	W01 M58 8681		
QIP(pcs)	GOODYEAR		
25	1R 11 796		
Remarks	AIRTECH		
	3887 K		
	CONNECT		
	MD 1887-K		

AIR EXPERT

1600887-6CS

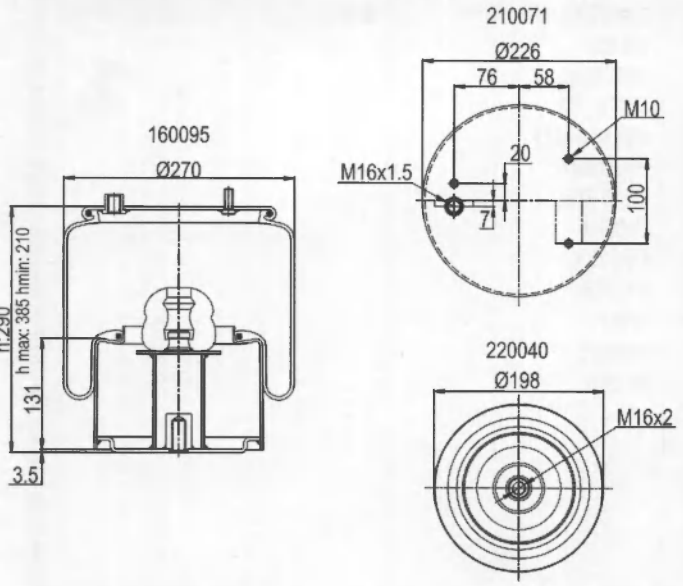

Order No 160095 weight(kg) 8 QIP(pcs) 25 Remarks	CONTITECH 887 MBK 6 FIRESTONE 1 T 15 LNR 3 W01 M58 8683 CONNECT MD 1887-K06	DAF	114525

1600889-CS

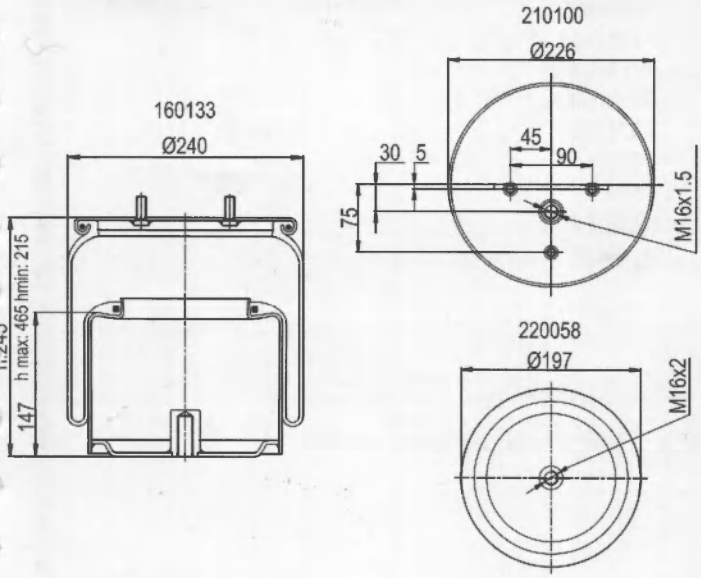

Order No 160133 weight(kg) 8 QIP(pcs) 25 Remarks	CONTITECH 889 MK2 FIRESTONE 1 T 15 LLR 5 W01 M58 8679 CONNECT MD 1889-K	DAF	1279141

1600902-CS

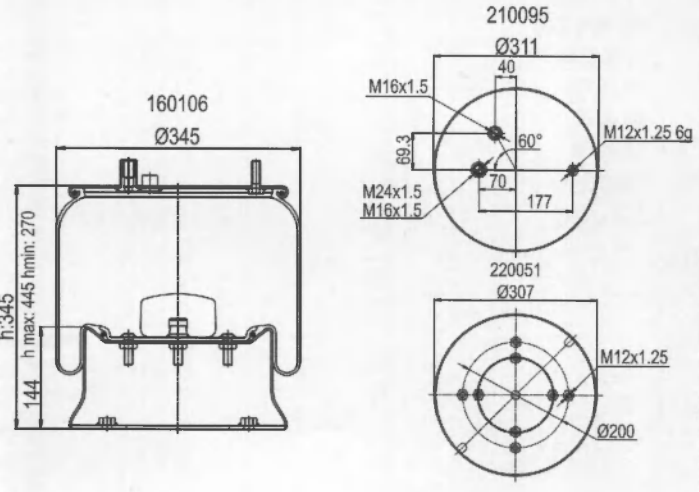

Order No 160106 weight(kg) 14.8 QIP(pcs) 22 Remarks	CONTITECH 902 MB FIRESTONE 1 T19 G-12 W01 M58 9910 AIRTECH 3902 K CONNECT MD 1902-K	GRANNING RENAULT V.I	15709 5010211724

AIR EXPERT

1600940

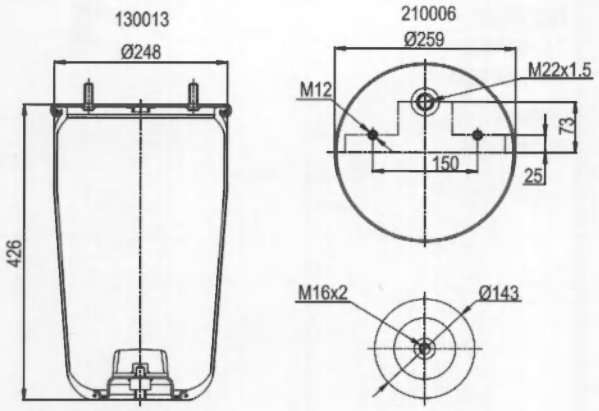

Order No	CONTITECH	BPW	05.429.40.91.0
130013	940 MB		
weight(kg)	FIRESTONE		
4.8	1T 17D- 4.3		
QIP(pcs)	W01 M58 8613		
30	GOODYEAR		
Remarks	1 R 11-703		
	PHOENIX		
	1 DK 21 K		
	AIRTECH		
	3940 P		
	CONNECT		
	MD 1940		

1600940-CS

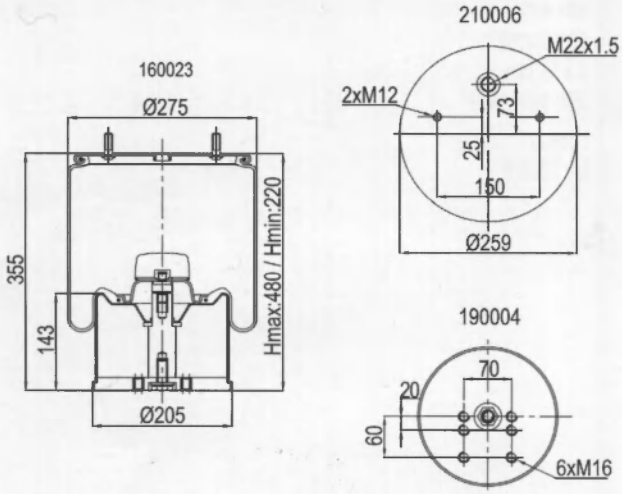

Order No	FIRESTONE	BPW	05.429.42.41.1
160023	1 T 17 D-4.3		
weight(kg)	W01 M58 8609		
11.4	GOODYEAR		
QIP(pcs)	1 R 11 763		
30	AIRTECH		
Remarks	3940 K		
	CONNECT		
	MD 1940-K		

1600940-CP

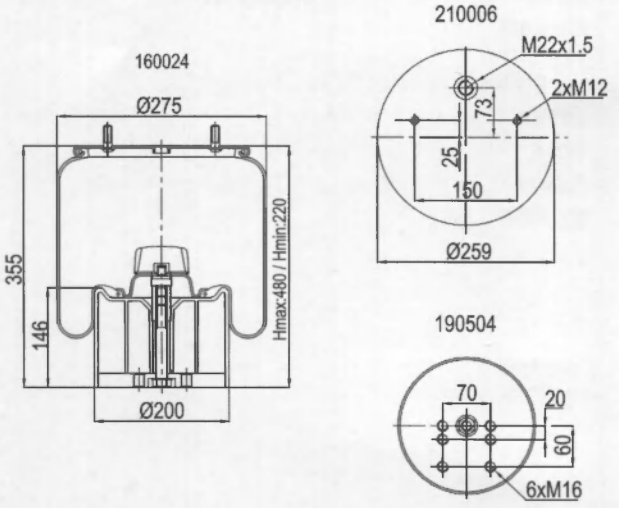

Order No	FIRESTONE	BPW	05.429.43.21.0
160024	1 T 17 D-4.3		
weight(kg)	W01 M58 8585		
8.5	GOODYEAR		
QIP(pcs)	1 R 11 752		
30	AIRTECH		
Remarks	3940 KPP		
	CONNECT		
	MD 1940-KP		

1600940-1CS

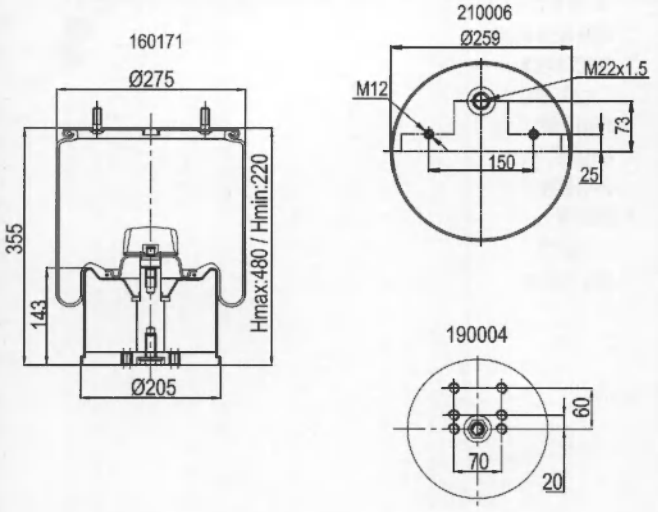

Order No
160171
weight(kg)
11.4
QIP(pcs)
30
Remarks

CONNECT
MD 1940-K01

1600940-1CP

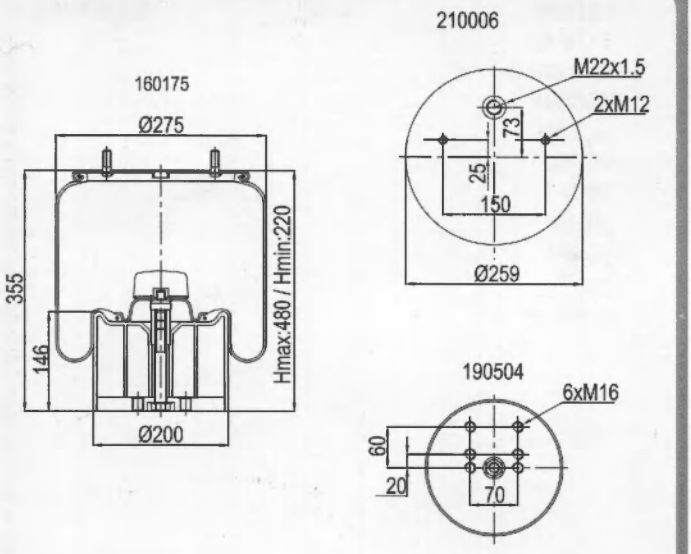

Order No
160175
weight(kg)
8.4
QIP(pcs)
30
Remarks

CONNECT
MD 1940-KP01

1600941

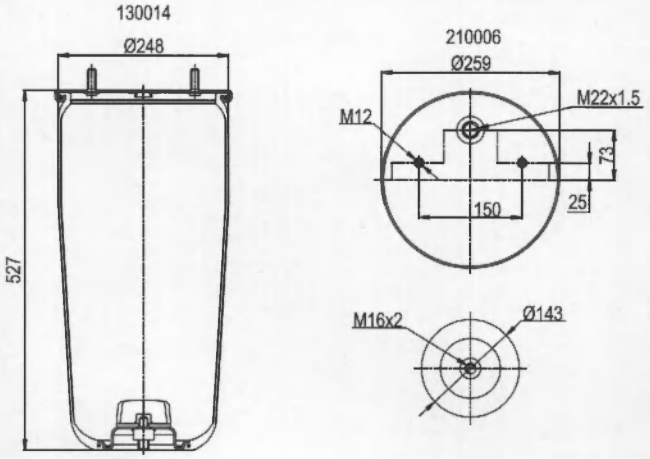

Order No
130014
weight(kg)
4.9
QIP(pcs)
30
Remarks

CONTITECH
941 MB
FIRESTONE
1T 17 D-8.3
W01 M58 8620
GOODYEAR
1 R 11-700
PHOENIX
1 DK 21
AIRTECH
3941 P
CF GOMMA
1 T 300-36
CONNECT
MD 1941

BPW 05.429.40.03.0

1600941-CS

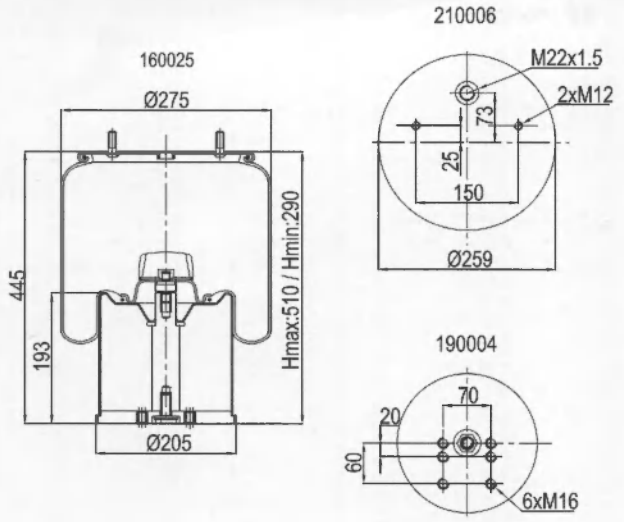

Order No 160025 weight(kg) 12.3 QIP(pcs) 30 Remarks	FIRESTONE 1T 17 D-8.3 W01 M58 8619 GOODYEAR 1 R 11 701 PHOENIX 1 DK 21 AIRTECH 3941 K CONNECT MD 1941-K	BPW	05.429.40.28.1

1600941-CP

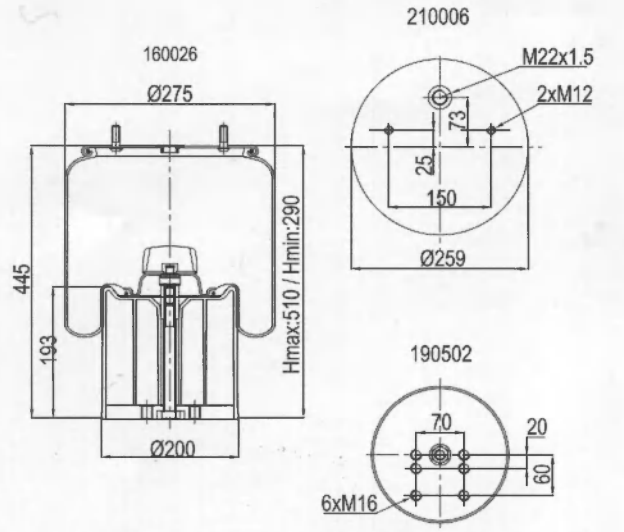

Order No 160026 weight(kg) 9.5 QIP(pcs) 30 Remarks	FIRESTONE 1T 17 D-8.3 W01 M58 8668 GOODYEAR 1 R 11 743 PHOENIX 1 DK 21 AIRTECH 3941 KPP CONNECT MD 1941-KP	BPW	05.429.43.20.0

1600941-1CS

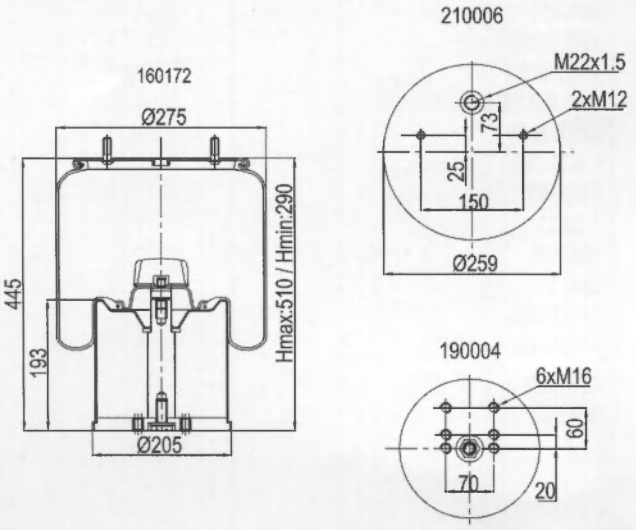

Order No 160172 weight(kg) 12.3 QIP(pcs) 30 Remarks	CONNECT MD 1941-K01		

1600941-1CP

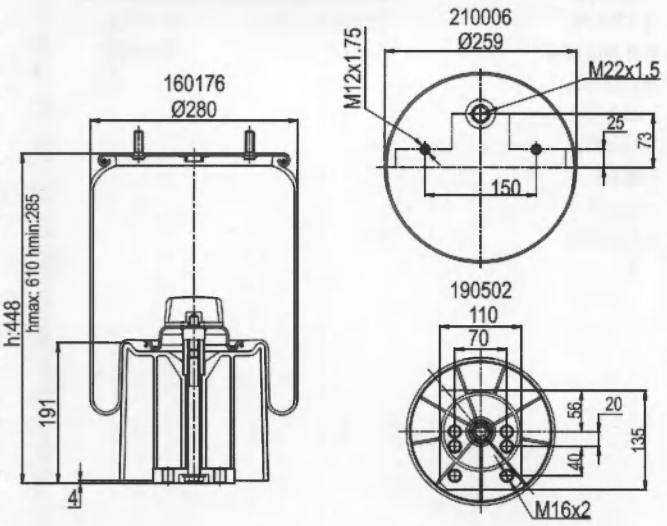

Order No
160176
weight(kg)
9.55
QIP(pcs)
30
Remarks

CONNECT
MD 1941-KP01

1600942

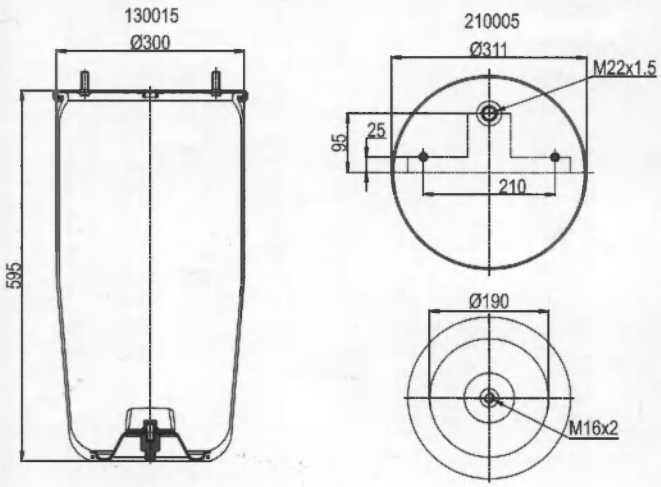

Order No
130015
weight(kg)
7.2
QIP(pcs)
20
Remarks

CONTITECH
942 MB
FIRESTONE
1T 66F-13.5
W01M58 8611
GOODYEAR
1 R 14-700
PHOENIX
1 DK32 L
AIRTECH
3942 P

CONNECT
MD 1942

BPW 05.429.40.05.0

1600942-CS

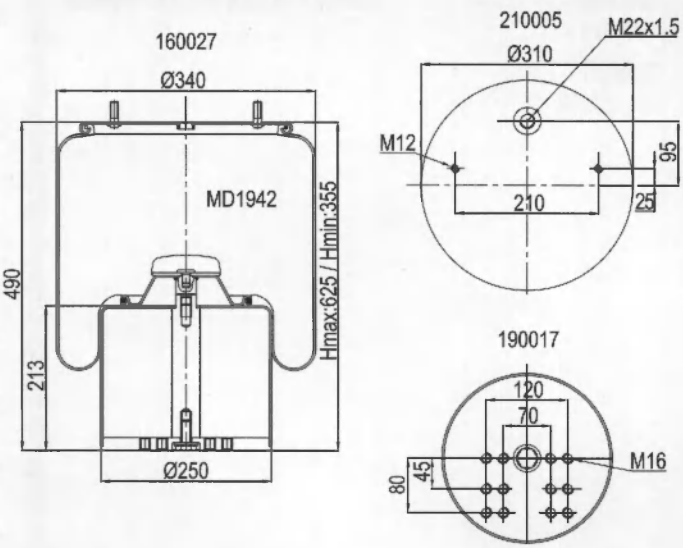

Order No
160027
weight(kg)
16.2
QIP(pcs)
20
Remarks

FIRESTONE
1T 66 D-13.5
W01 M58 8584
GOODYEAR
1R 14 - 781
AIRTECH
3942 K

CONNECT
MD 1942-K

BPW 05.429.41.69.0

1600081-CS

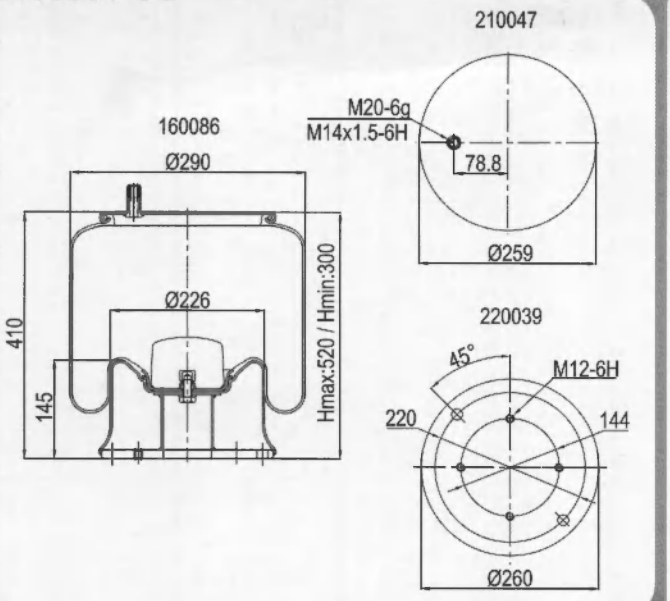

Order No
160086
weight(kg)
14
QIP(pcs)
25
Remarks

FIRESTONE
1T 17 B-11
W01 M58 8747
GOODYEAR
1 R 13-150
AIRTECH
30081 K
CONNECT
MD 10081-K

DISCOS / MERCEDES 9463280401
HENDRICKSON HS 251087
SAMRO 2500915

1600302-CS

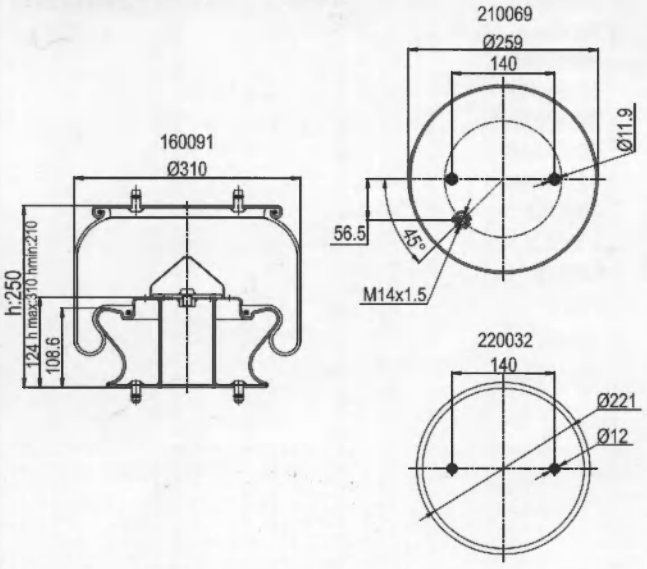

Order No
160091
weight(kg)
8.5
QIP(pcs)
30
Remarks

AIRTECH
330302 K
CONNECT
MD 10302-K

SCANIA + SCANIA BUSSAR 1440302

1600304-CS

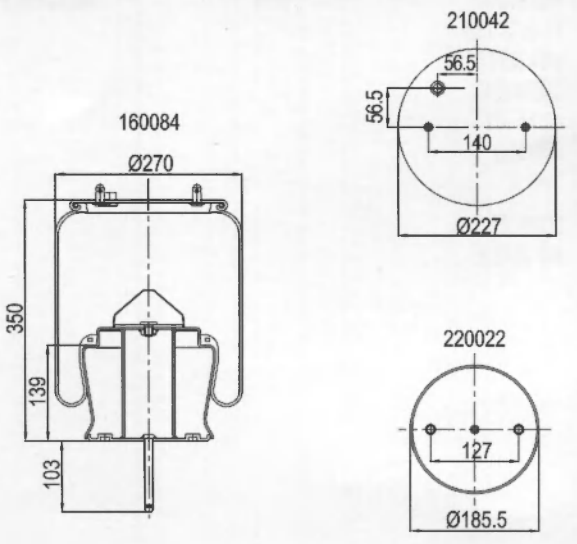

Order No
160084
weight(kg)
7.5
QIP(pcs)
30
Remarks

AIRTECH
330304 K
CONNECT
MD 10304-K

SCANIA + SCANIA BUSSAR 1440304

1600305-CS

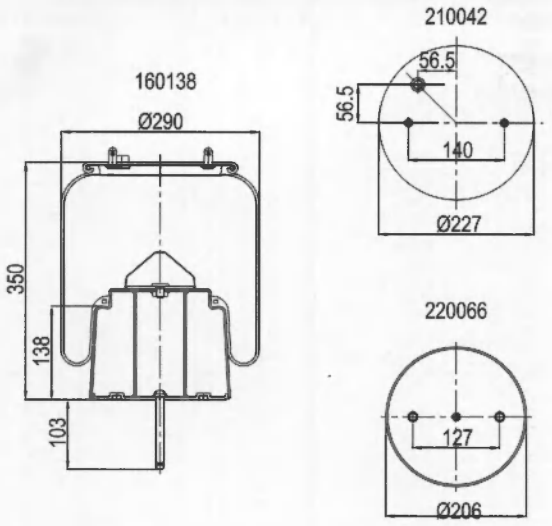

Order No
160138
weight(kg)
8.9
QIP(pcs)
30
Remarks

AIRTECH
330305 K
CONNECT
MD 10305-K

SCANIA + SCANIA BUSSAR 1440305

1602143-CS

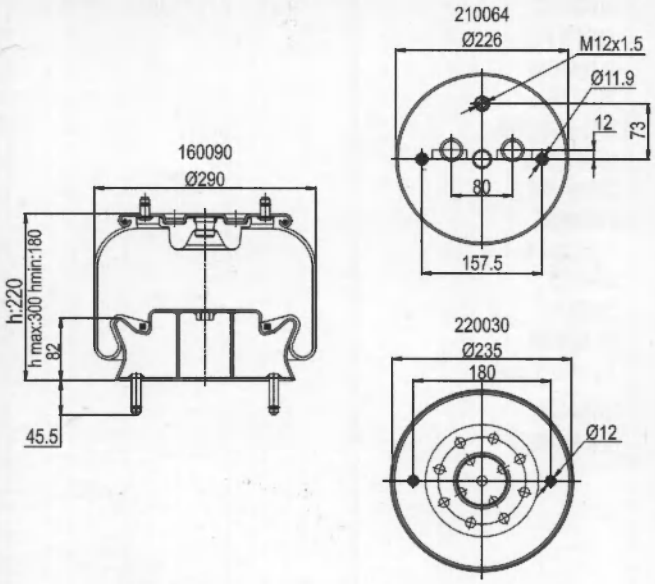

Order No
160090
weight(kg)
7
QIP(pcs)
30
Remarks

CONNECT
MD 12143-K

SCANIA + SCANIA BUSSAR 1362143
1389198

1602725

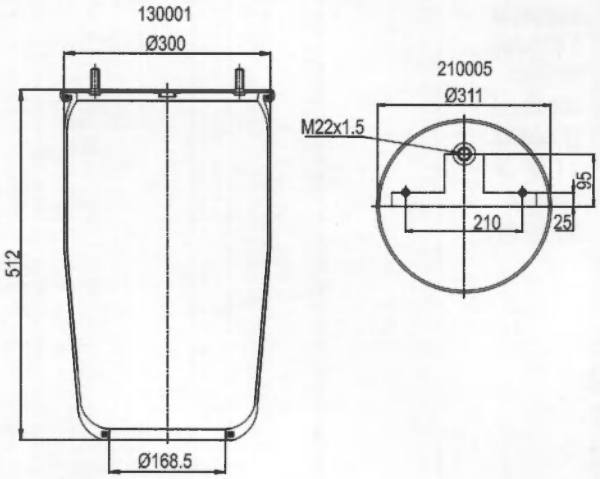

Order No
130001
weight(kg)
5.5
QIP(pcs)
20
Remarks

AIRTECH
32725 P

CONNECT
MD 12725

1602725-CS

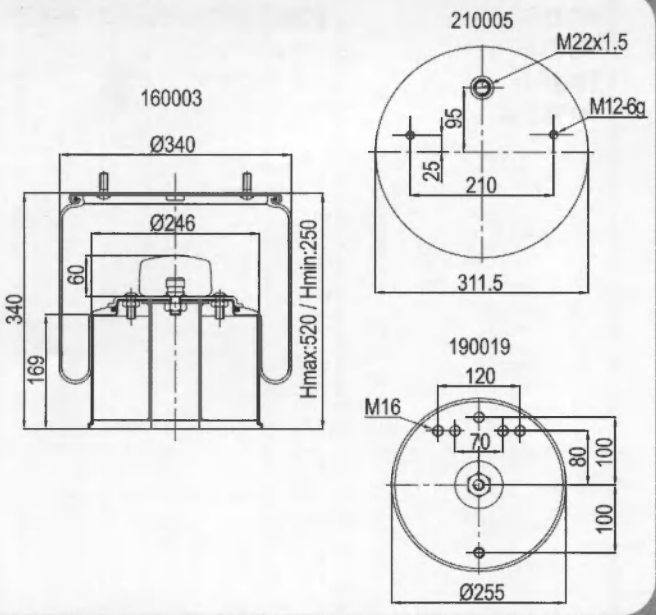

Order No 160003 weight(kg) 16 QIP(pcs) 20 Remarks	AIRTECH 32725 K CONNECT MD 12725-K	

1600302-CS

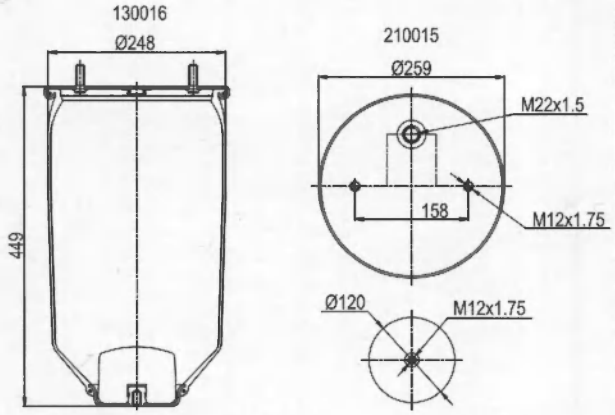

Order No 130016 weight(kg) 5.3 QIP(pcs) 25 Remarks	CONTITECH 4004 N P02 FIRESTONE 1T 17 BS-6 W01 M58 0919 GOODYEAR 1 R 11-705 PHOENIX 1 DK 22 E 5 AIRTECH 34004 P CF GOMMA 1 T 19 E-5 steel CONNECT MD 14004	

1604004-CS

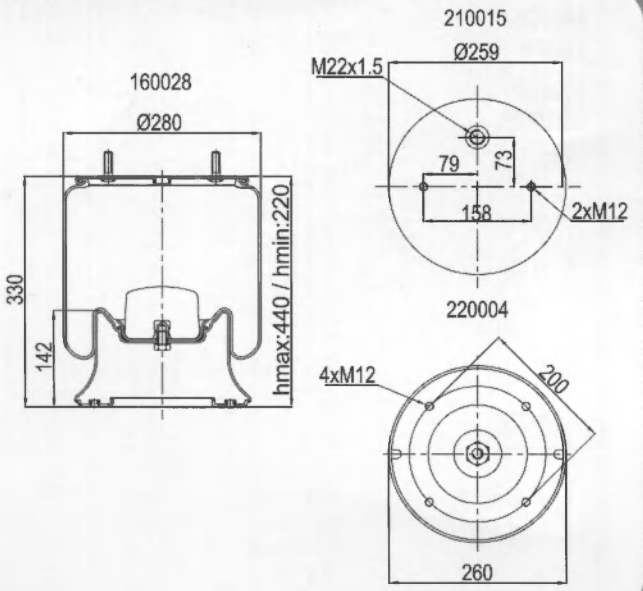

Order No 160028 weight(kg) 9.3 QIP(pcs) 25 Remarks	CONTITECH 4004 N P03 GOODYEAR 1 R 11-706 PHOENIX 1DK 22 E-5 CF GOMMA 1 T 300-37 CONNECT MD 14004-K	

1604004-CP

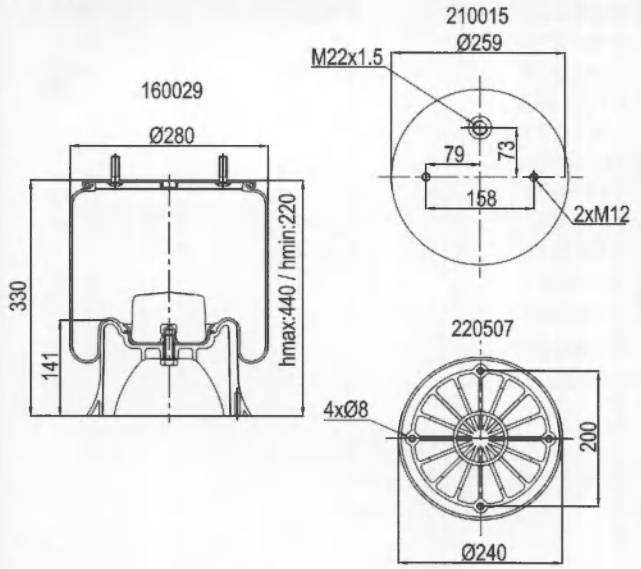

Order No
160029
weight(kg)
7.1
QIP(pcs)
25
Remarks

CONTITECH
4004 NP 03
FIRESTONE
1 T 15 BS-6
W01 M58 6366
GOODYEAR
1 R 11-713
PHOENIX
1DK 22 E-8
AIRTECH
34004 KPP
CONNECT
MD 14004-KP

S.A.F 3.229.0007.00

1604022

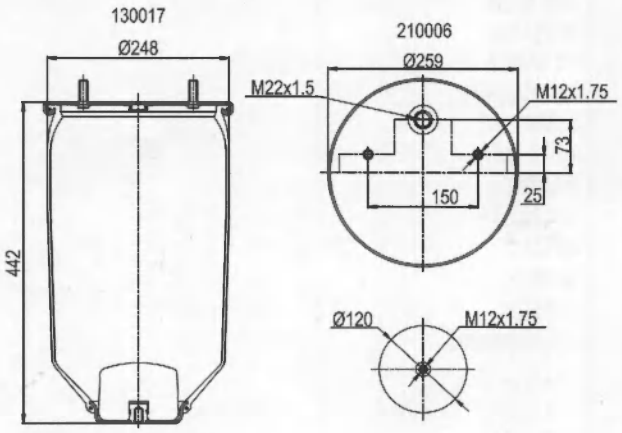

Order No
130017
weight(kg)
5.3
QIP(pcs)
30
Remarks

CONTITECH
4022 N P02
FIRESTONE
1T 17 BS-6
W01 M58 0756
GOODYEAR
1 R 11-709
PHOENIX
1 DK22 E-9
AIRTECH
34022 P
CONNECT
MD 14022

1604022-CS

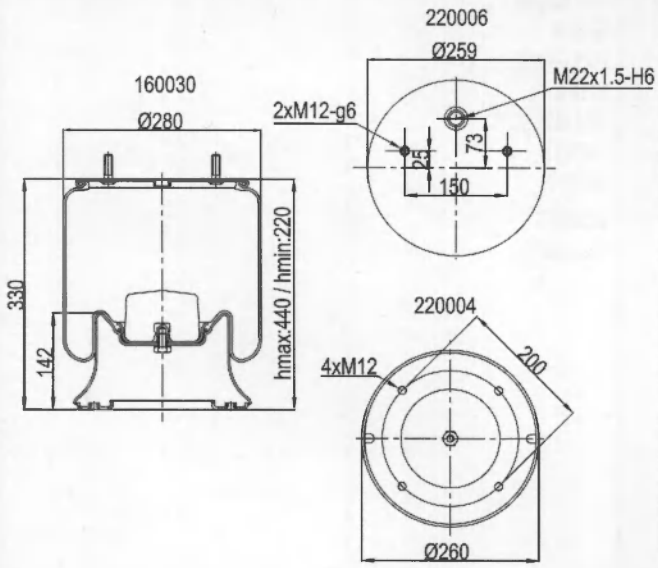

Order No
160030
weight(kg)
8.6
QIP(pcs)
25
Remarks

CONTITECH
4022 N P03
GOODYEAR
1 R 11-710
PHOENIX
1DK 22 E-6
CF GOMMA
1 T 300-37
CONNECT
MD 14022-K

1604022-CP

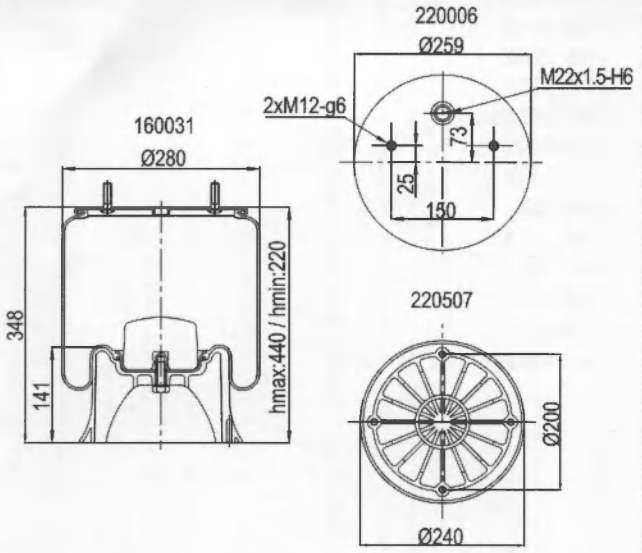

Order No 160031 weight(kg) 7.1 QIP(pcs) 25 Remarks	CONTITECH 4022 NP 03 FIRESTONE 1 T 15 BS-6 W01 M58 6367 GOODYEAR 1 R 11-714 PHOENIX 1DK 22 E-9 AIRTECH 34022 KPP CONNECT MD 14022-KP	S.A.F	3.229.0029.00

1604022-5CP

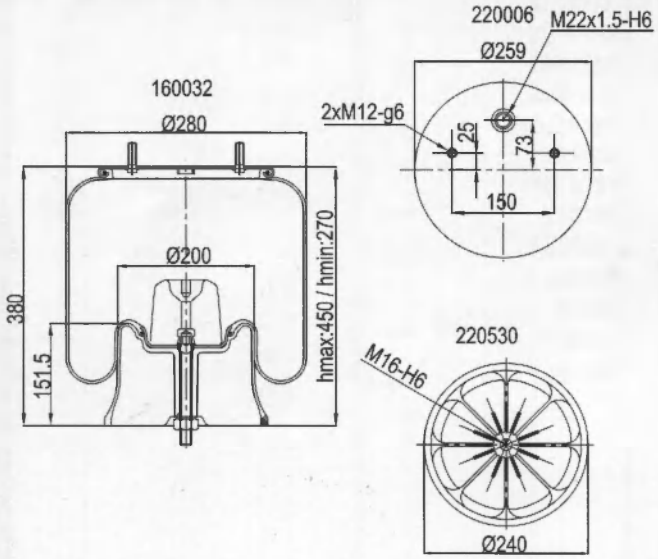

Order No 160032 weight(kg) 7.3 QIP(pcs) 25 Remarks	CONTITECH 4022 N P05 FIRESTONE 1 T 17 BS-6 W01 M58 8612 GOODYEAR 1 R 11-781 PHOENIX 1DK 22 E-11 AIRTECH 32618 K CONNECT MD 14022-KP05	S.A.F	3.229.0033.00

1604023

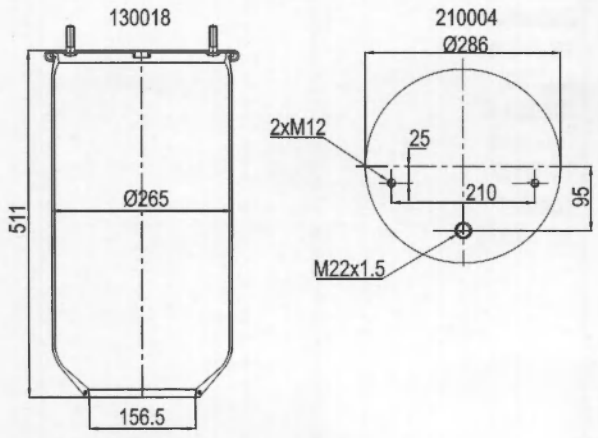

Order No 130018 weight(kg) 5.4 QIP(pcs) 22 Remarks	CONTITECH 4023 N FIRESTONE 1T19 L-11 W01 M58 6335 AIRTECH 34023 P CONNECT MD 14023		

1604023-CS

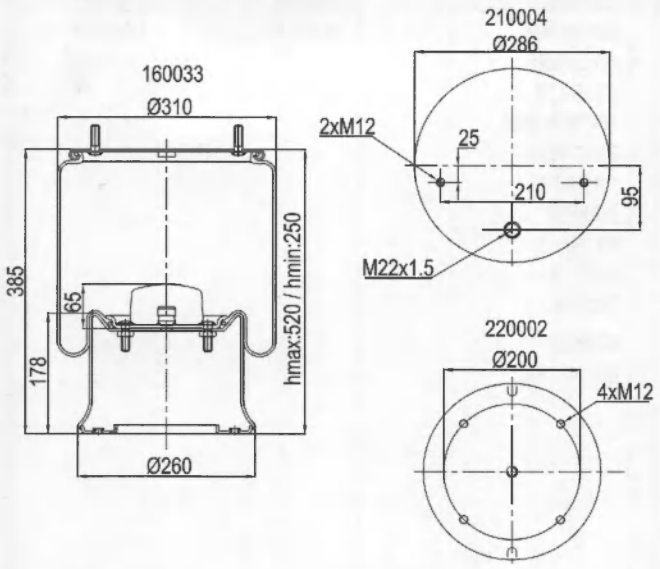

Order No
160033
weight(kg)
11.6
QIP(pcs)
22
Remarks

CONTITECH
4023 N P03
GOODYEAR
1 R 14-729
PHOENIX
1 D 28 B 10
AIRTECH
34023 K
CONNECT
MD 14023-K

S.A.F 3.229.0031.00

1604023-CP

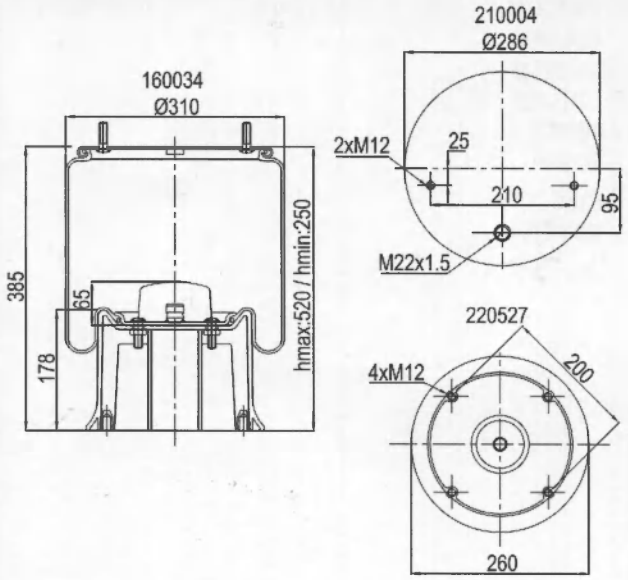

Order No
160034
weight(kg)
9
QIP(pcs)
22
Remarks

FIRESTONE
1T 19 F-11
W01 M58 6348
CONNECT
MD 14023-KP

1604028

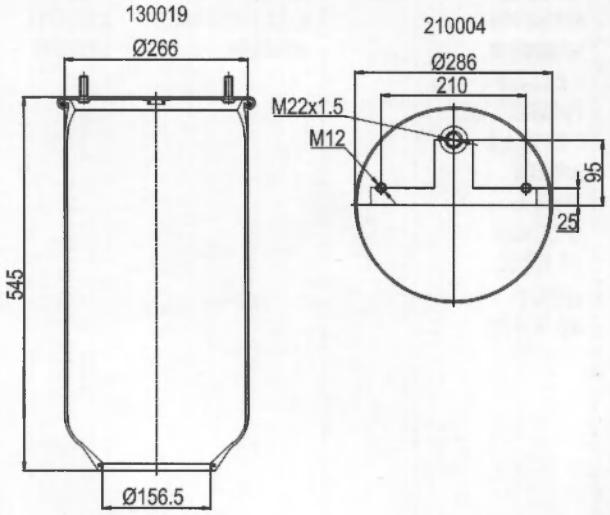

Order No
130019
weight(kg)
2.4
QIP(pcs)
30
Remarks

CONTITECH
4028 N
AIRTECH
34028 P
CONNECT
MD 14028

1604028-CS

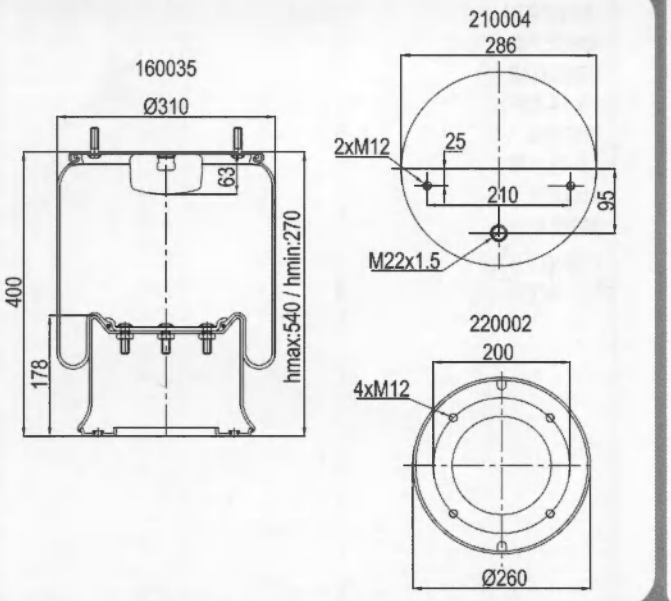

Order No 160035 weight(kg) 13 QIP(pcs) 25 Remarks	CONTITECH 4028 N P02 FIRESTONE 1 T 19 L12 W01 M58 8106 GOODYEAR 1 R 14-782 PHOENIX 1D 28F - 1 AIRTECH 34028 K CONNECT MD 14028-K	SCHMITZ WEWELER	015 323 US 04028

1604156

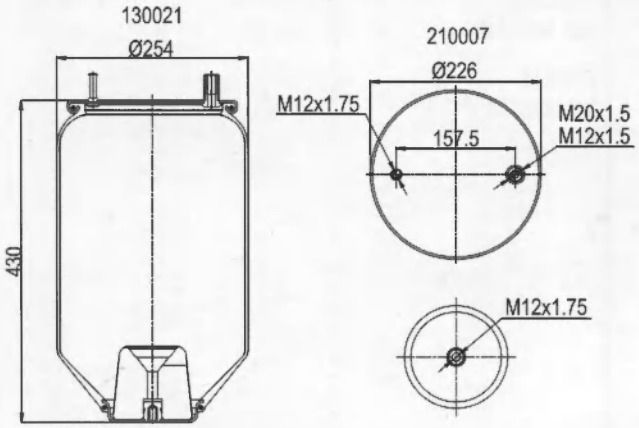

Order No 130021 weight(kg) 4.65 QIP(pcs) 30 Remarks	CONTITECH 4156 N P05 GOODYEAR 1 R 11-753 AIRTECH 34156 P CONNECT MD 14156		

1604156-CS

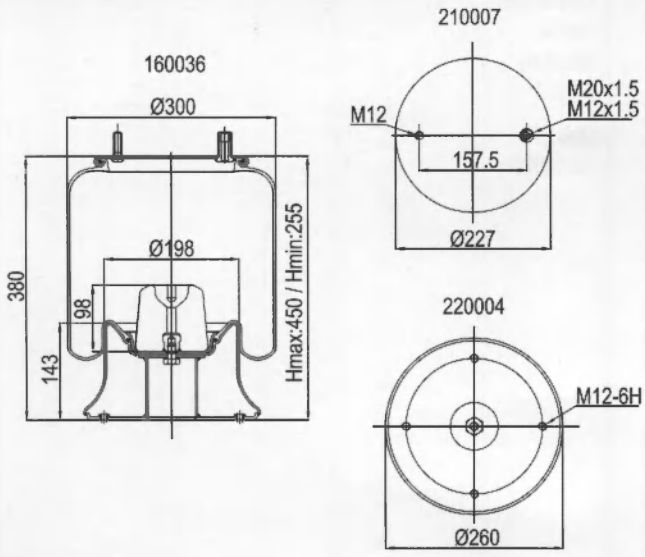

Order No 160036 weight(kg) 10.2 QIP(pcs) 25 Remarks	CONTITECH 4156 N P06 GOODYEAR 1 R 12-719 PHOENIX 1 DK 21 A-2 AIRTECH 34156 K CF GOMMA 1 T 323-33 CONNECT MD 14156-K	NEWAY R.O.R / MERITOR WEWELER	905.57.075 2121 5761 21515761

1604156-CP

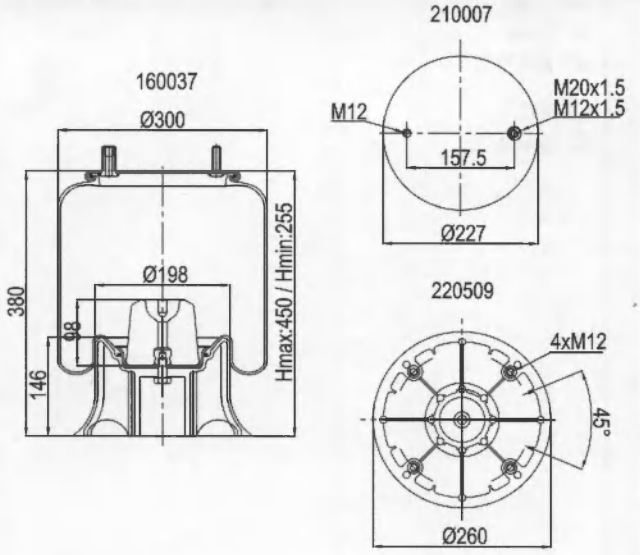

Order No 160037 weight(kg) 6.9 QIP(pcs) 25 Remarks	CONTITECH 4156 N P06 FIRESTONE 1T 15 M-6 W01 358 9361 GOODYEAR 1 R 12-719 PHOENIX 1 DK 21 A-2 AIRTECH 34156 KPP CF GOMMA 1 T 323-33 CONNECT MD 14156-KP	

1604156-5CP

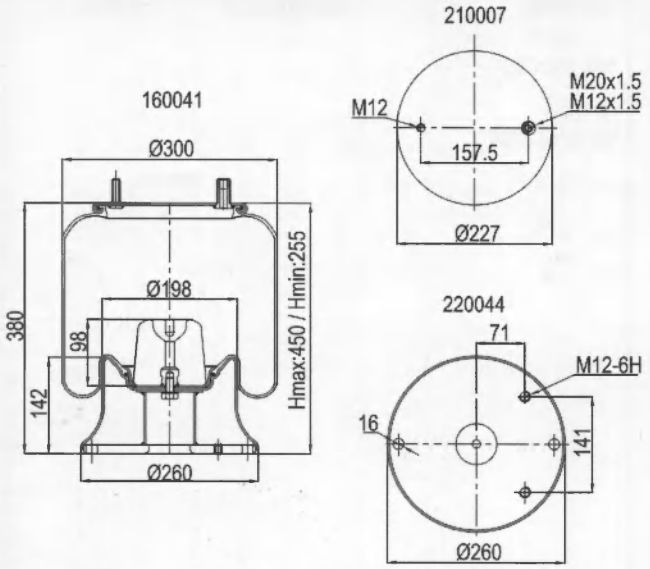

Order No 160041 weight(kg) 12.4 QIP(pcs) 25 Remarks	CONTITECH 4156N P09 FIRESTONE 1T 15 M-6 W01 M58 9089 GOODYEAR 1 R 12-706 AIRTECH 34156 K03 CONNECT MD 14156-K05	FRUEHAUF UJB0207-001 R.O.R / MERITOR 2121 5761

1604156-16

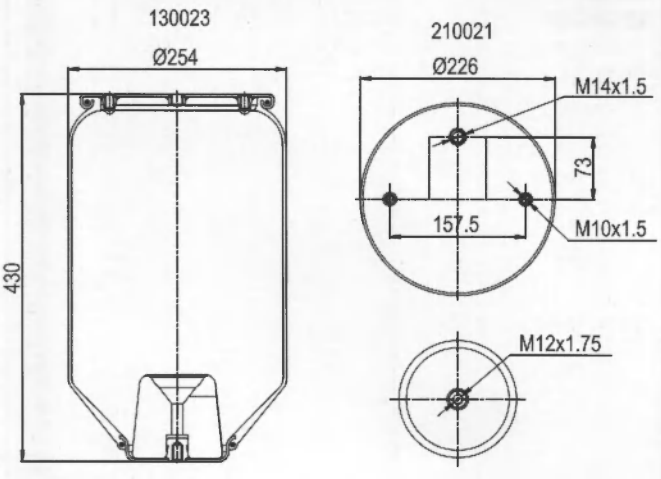

Order No 130023 weight(kg) 4.9 QIP(pcs) 30 Remarks	FIRESTONE 1T 15 M-6 W01 358 0734 CONNECT MD 14156-16	

1604156-16CP

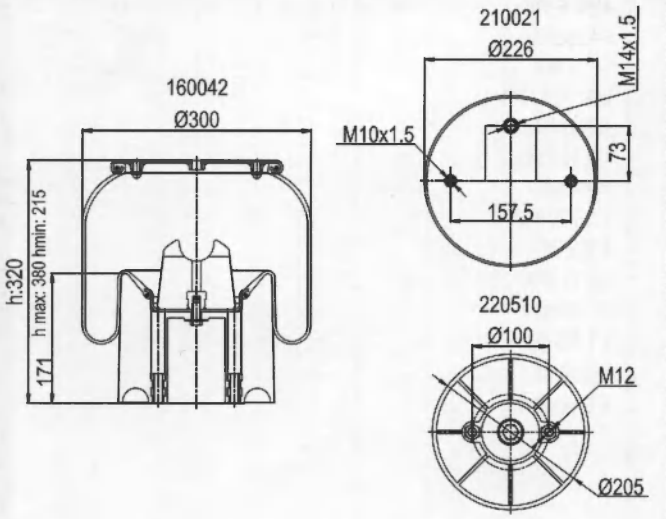

Order No
160042
weight(kg)
6.8
QIP(pcs)
25
Remarks

FIRESTONE
1 T 15 M-6
W01 M58 7291

CONNECT
MD 14156-KP16

SCANIA + SCANIA BUSSAR 1123396

1604156-88CP

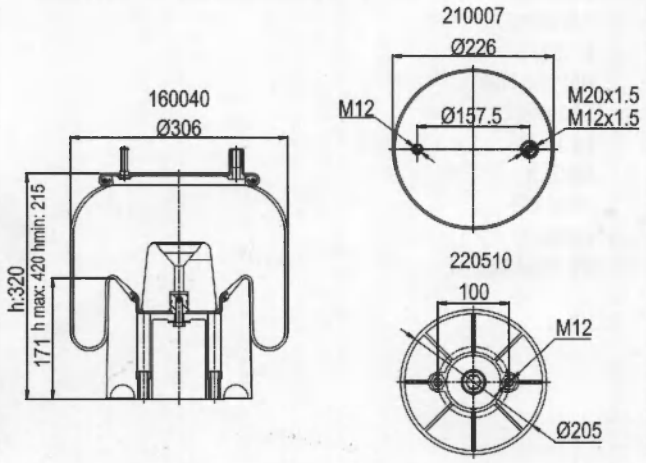

Order No
160040
weight(kg)
6.9
QIP(pcs)
25
Remarks

FIRESTONE
1 T 15 M-6
W01 455 6288

CONNECT
MD 14156-KP88

HENDRICKSON 100053

1604157-4

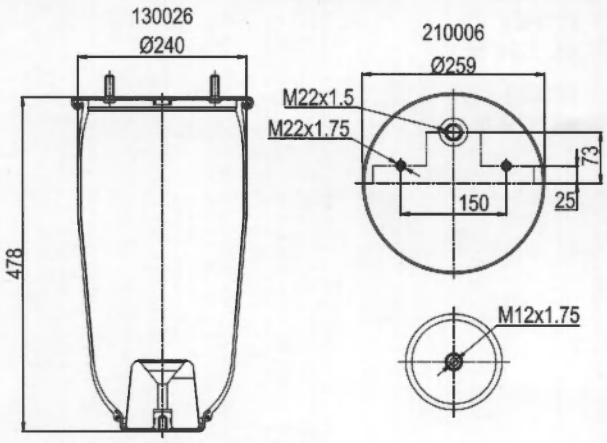

Order No
130026
weight(kg)
5.2
QIP(pcs)
30
Remarks

CONNECT
MD 14157-04

1604157-4CP

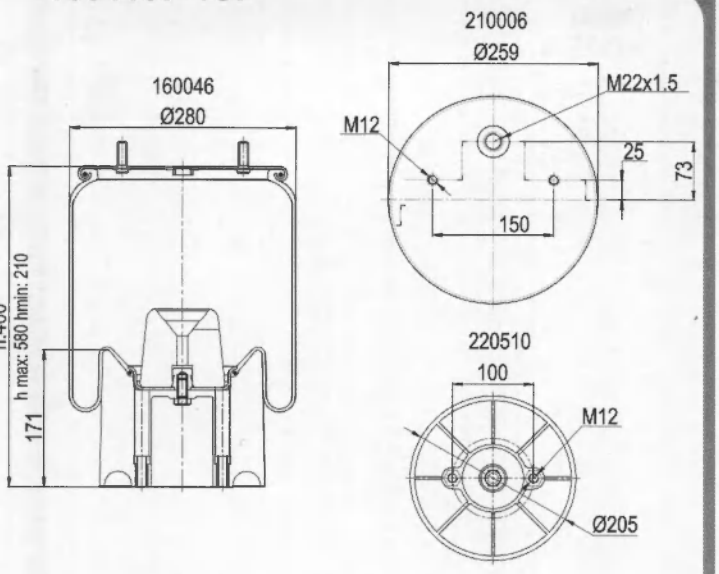

Order No
160046
weight(kg)
9
QIP(pcs)
30
Remarks

CONTITECH
4157 N P04
AIRTECH
34157 K
CONNECT
MD 14157-KP04

MERCEDES A 946 328 14 01
R.O.R / MERITOR 21221307
WEWELER US 87 EURO F

1604157-5

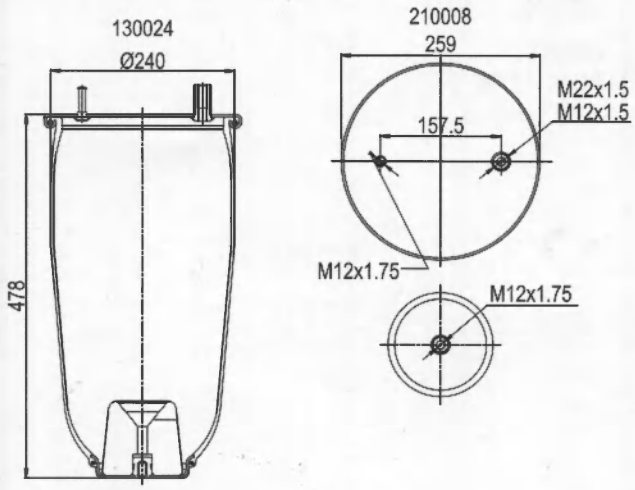

Order No
130024
weight(kg)
5.7
QIP(pcs)
30
Remarks

AIRTECH
34157 P
CONNECT
MD 14157-5

1604157-5CP

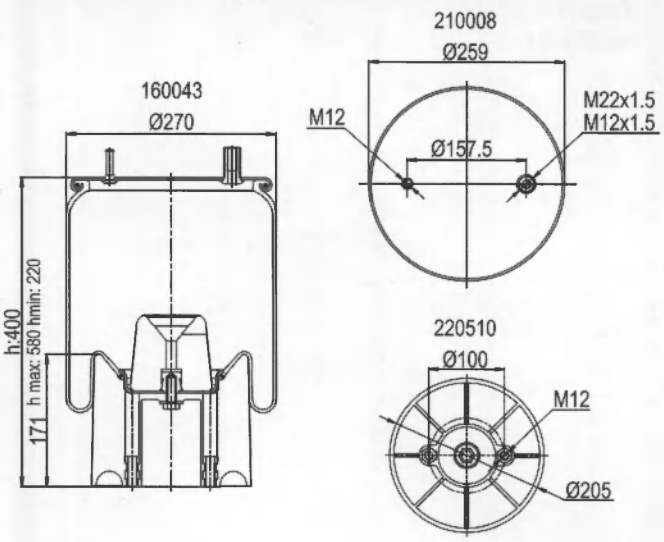

Order No
160043
weight(kg)
6.2
QIP(pcs)
30
Remarks

CONTITECH
4157 N P05
CONNECT
MD 14157-KP05

1604157-6

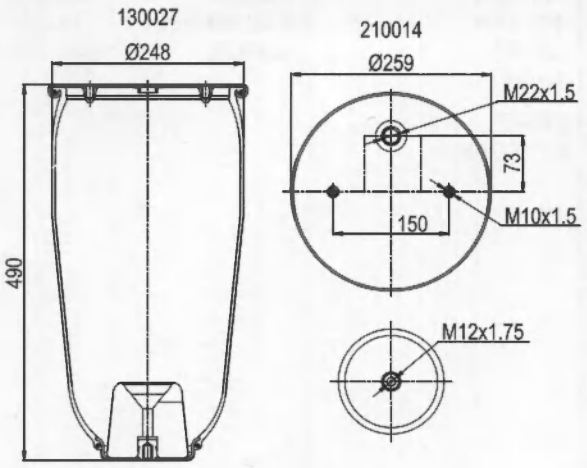

Order No
130027
weight(kg)
5.2
QIP(pcs)
30
Remarks

CONNECT
MD 14157-06

1604157-6CP

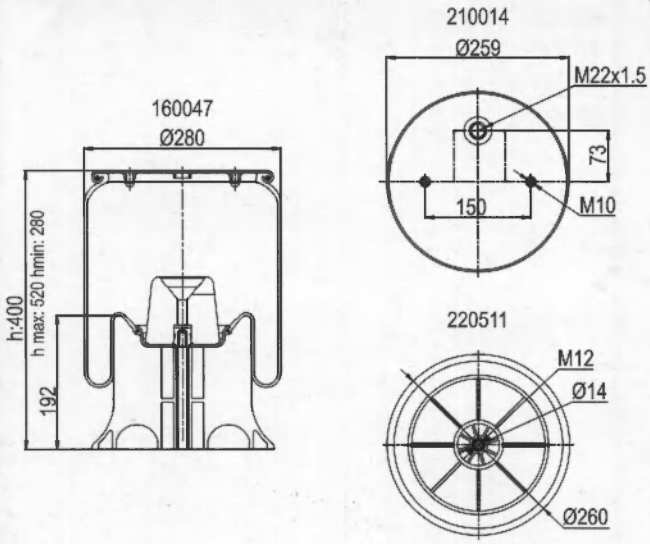

Order No
160047
weight(kg)
6.2
QIP(pcs)
30
Remarks

CONTITECH
4157 N P06

CONNECT
MD 14157-KP06

WEWELER US 06316

1604157-14

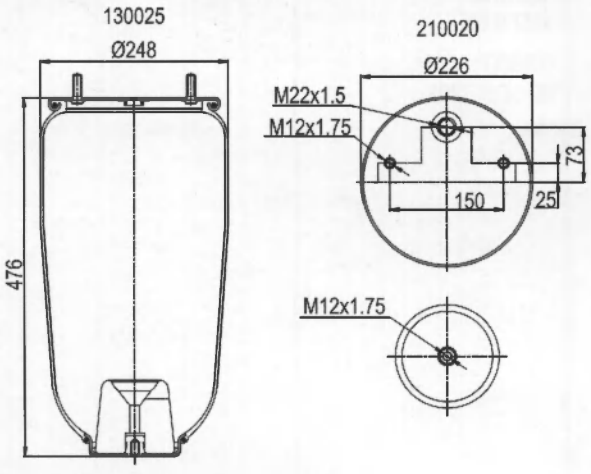

Order No
130025
weight(kg)
5.2
QIP(pcs)
30
Remarks

CONNECT
MD 14157-14

1604157-14CP

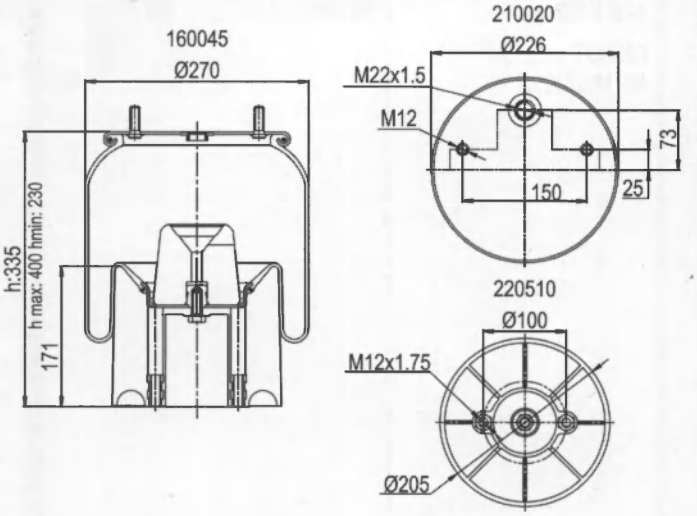

Order No	FIRESTONE	MERCEDES	A 946 328 14 01
160045	1T 15 MPW-7	R.O.R / MERITOR	21221307
weight(kg)	W01 M58 6297	WEWELER	US 87
9	GOODYEAR		
QIP(pcs)	1R 11 - 111		
30	PHOENIX		
Remarks	1DK 21 A-4		
	AIRTECH		
	39002 A8-KPP		
	CONNECT		
	MD 14157-KP14		

1604157-15

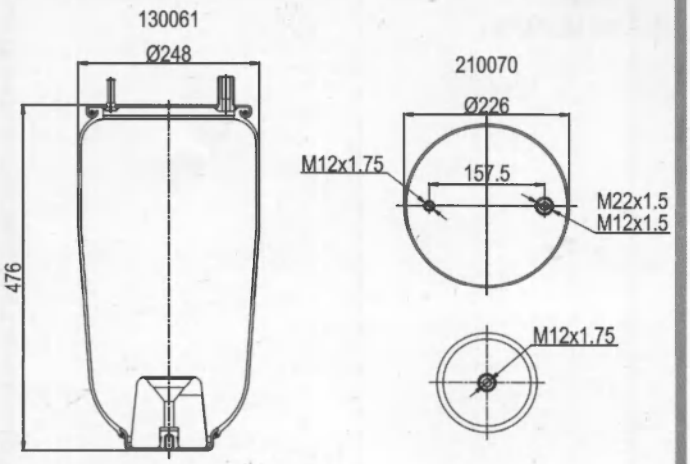

Order No	CONNECT	
130061	MD 14157-15	
weight(kg)		
QIP(pcs)		
Remarks		

1604157-15CP

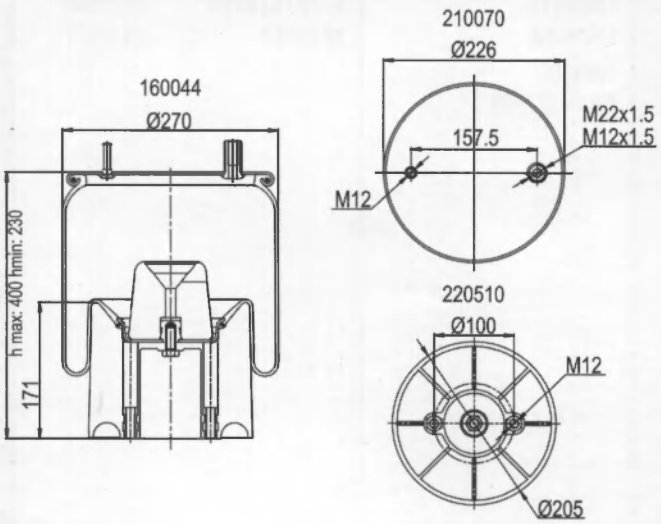

Order No	FIRESTONE	R.O.R / MERITOR	21222442
160044	1T 15 MPW-7	WEWELER	US 07074
weight(kg)	W01 M58 7074		
9	GOODYEAR		
QIP(pcs)	1 R 11 106		
30	PHOENIX		
Remarks	1 DK 21 A-31		
	AIRTECH		
	39002 A3 KPP		
	CONNECT		
	MD 14157-KP15		

1604157-8CP

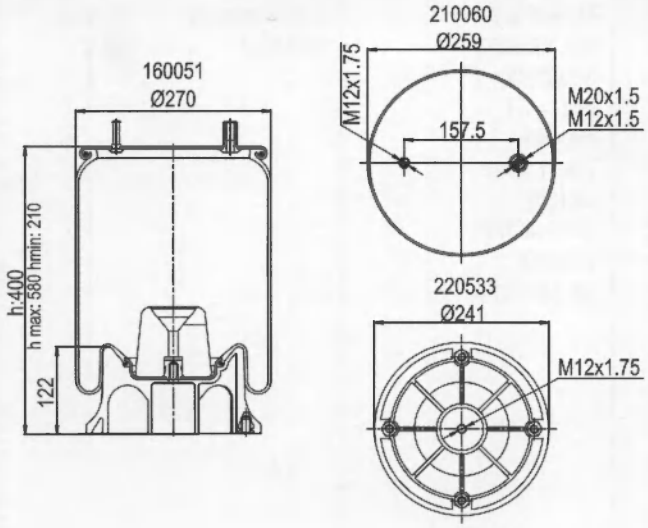

Order No
160051
weight(kg)
8
QIP(pcs)
30
Remarks

CONTITECH
4157 N P08
CONNECT
MD 14157-KP08

FRUEHAUF M078580
NEWAY 905 572 33

1604157-18CP

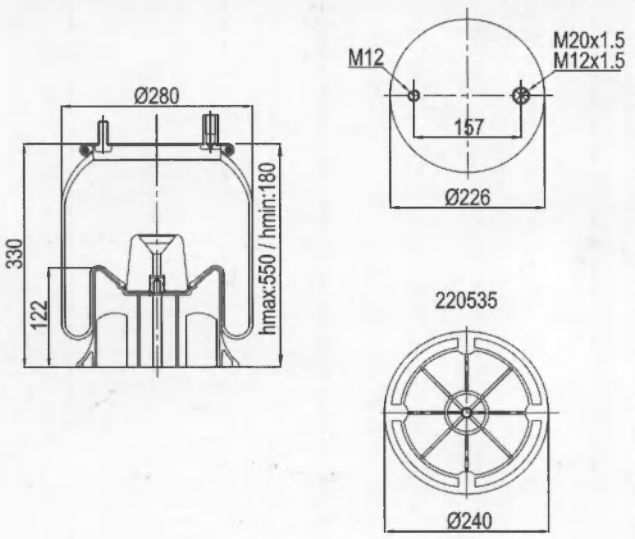

CONNECT
MD 14157-KP18

1604157-9CP

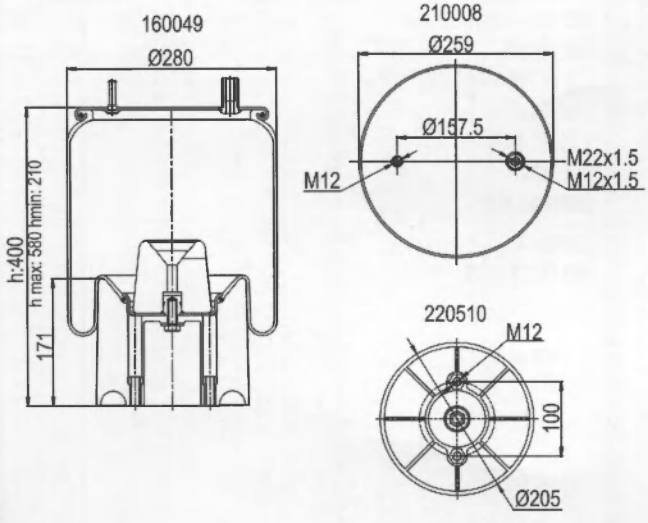

Order No
160049
weight(kg)
9
QIP(pcs)
30
Remarks

CONTITECH
4157 N P09
CONNECT
MD 14157-KP09

R.O.R / MERITOR 2122 2442
WEWELER US 07074

1604157-10CP

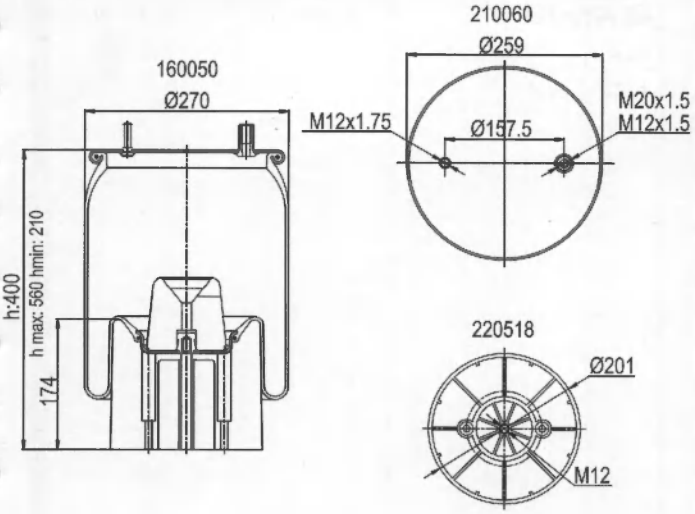

Order No
160050
weight(kg)
10
QIP(pcs)
30
Remarks

CONTITECH
4157 N P10
FIRESTONE
CONNECT
MD 14157-KP10

FRUEHAUF UJB0975

1604157-16

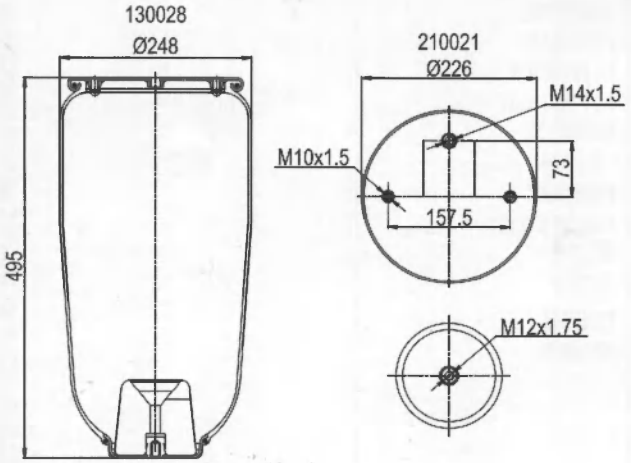

Order No
130028
weight(kg)
5.2
QIP(pcs)
30
Remarks

FIRESTONE
1T 15 MPW 7
W01 M58 8194
CONNECT
MD 14157-16

1604157-16CP

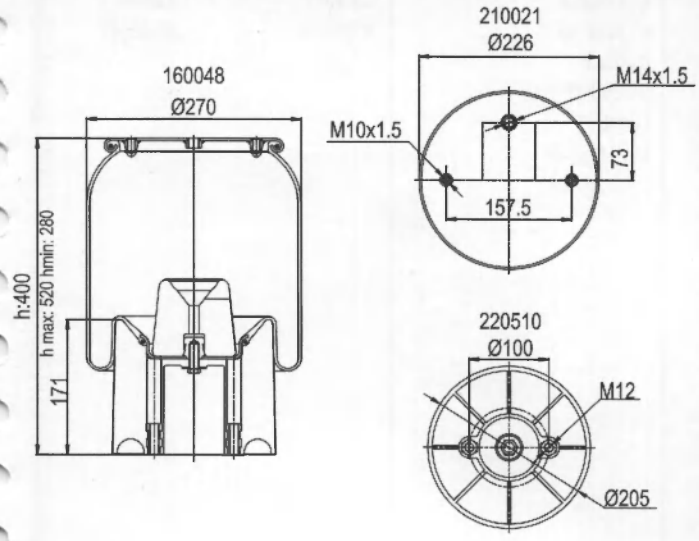

Order No
160048
weight(kg)
9
QIP(pcs)
30
Remarks

CONNECT
MD 14157-KP16

1604157-CP66

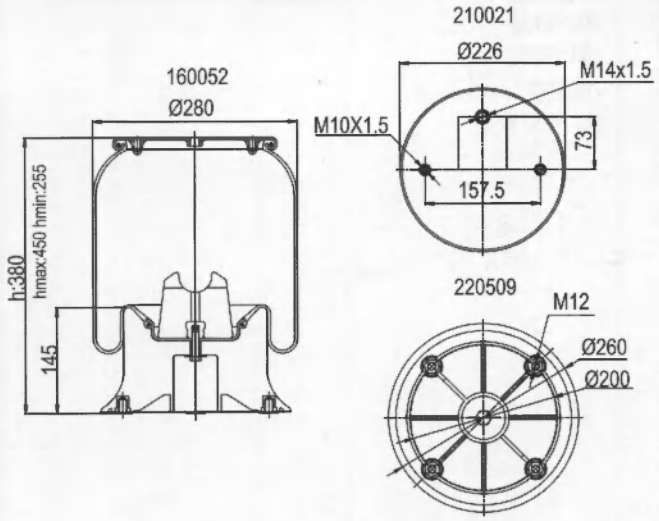

Order No
160052
weight(kg)
9
QIP(pcs)
30
Remarks

CONNECT
MD 14157-KP66

1604158

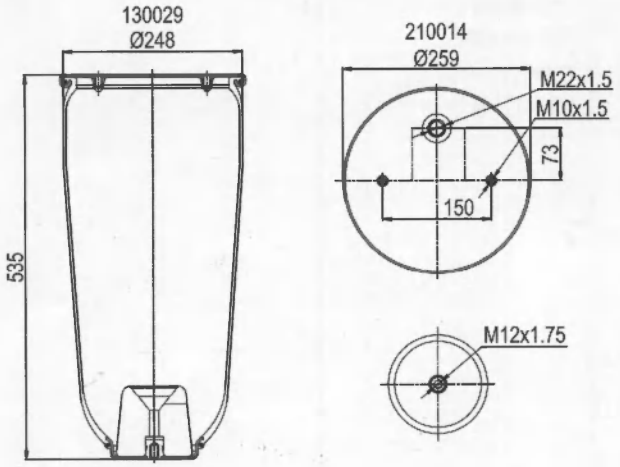

Order No
130029
weight(kg)
5.8
QIP(pcs)
30
Remarks

CONTITECH
4158 N P08
FIRESTONE
1T 15 MPW 9
W01 M58 6527
GOODYEAR
1 R 12 748
PHOENIX
1 DK 20 B-1 NP
AIRTECH
34158 P
CONNECT
MD 14158

1604158-CP

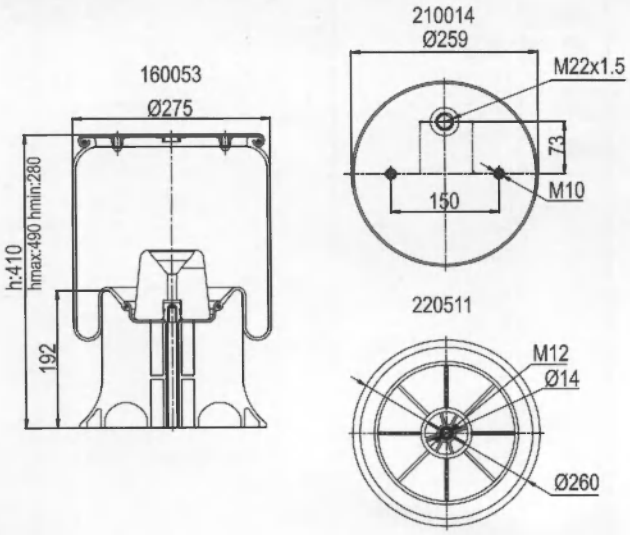

Order No
160053
weight(kg)
8.2
QIP(pcs)
25
Remarks

CONTITECH
4158 NP 03
AIRTECH
34158 KPP
CONNECT
MD 14158-KP

SCHMITZ 750999
WEWELER US 06285

1604159

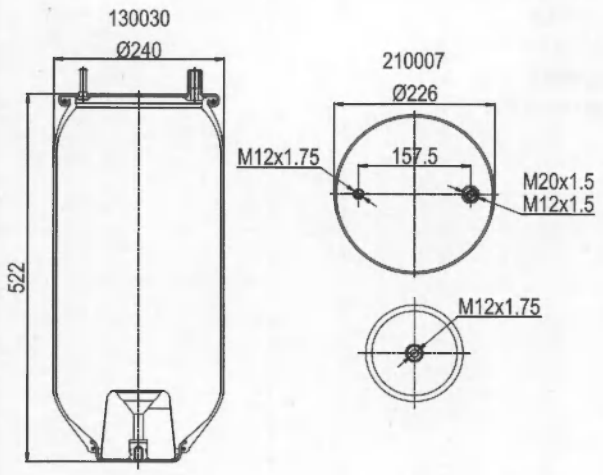

Order No
130030
weight(kg)
5.5
QIP(pcs)
30
Remarks

CONTITECH
4159 N P05
FIRESTONE
1T 15 M-9
W01 M58 0736
GOODYEAR
1 R 12 761
PHOENIX
1 DK 21 B-5 NP
AIRTECH
34159 P
CF GOMMA
1 T 323-40
CONNECT
MD 14159

1604159-CS

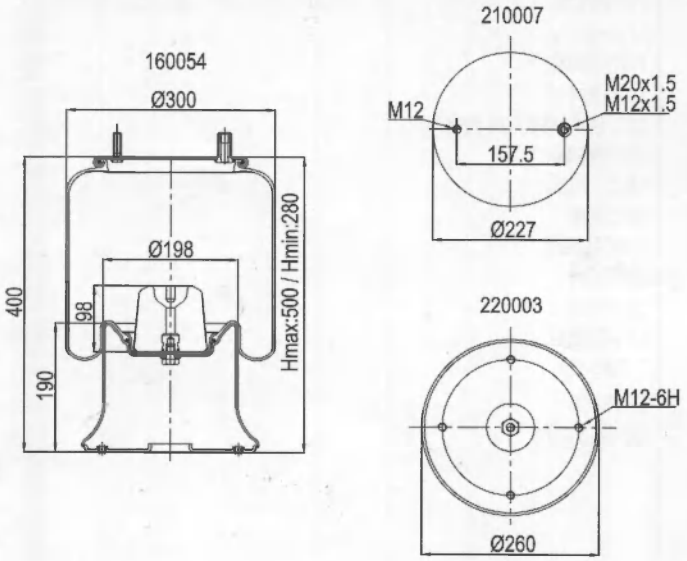

Order No
160054
weight(kg)
7.8
QIP(pcs)
25
Remarks

CONTITECH
4159 N P03
GOODYEAR
1 R 12-715
AIRTECH
34159-02 K
CF GOMMA
1 T323-40
CONNECT
MD 14159-K

1604159-CP

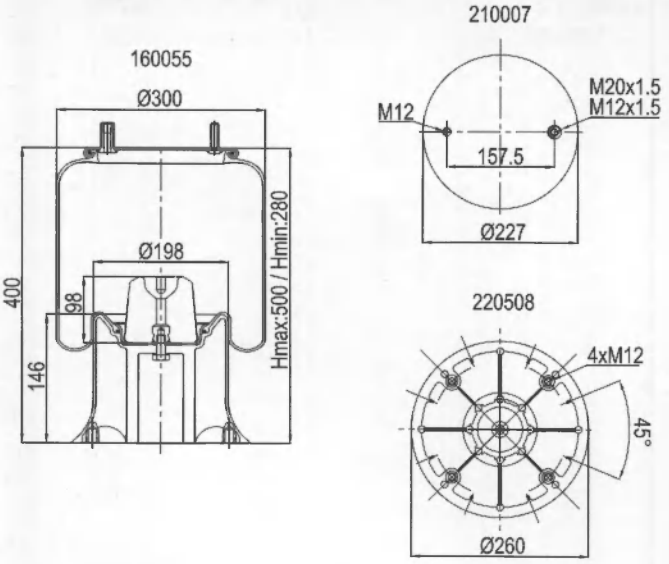

Order No
160055
weight(kg)
7.5
QIP(pcs)
25
Remarks

CONTITECH
4159 NP14
FIRESTONE
1 T15 M-9
W01 358 8853
PHOENIX
1DK 12 B4
AIRTECH
34159-10 KPP
CF GOMMA
1 T323-40
CONNECT
MD 14159-KP

NEWAY M00 557 007

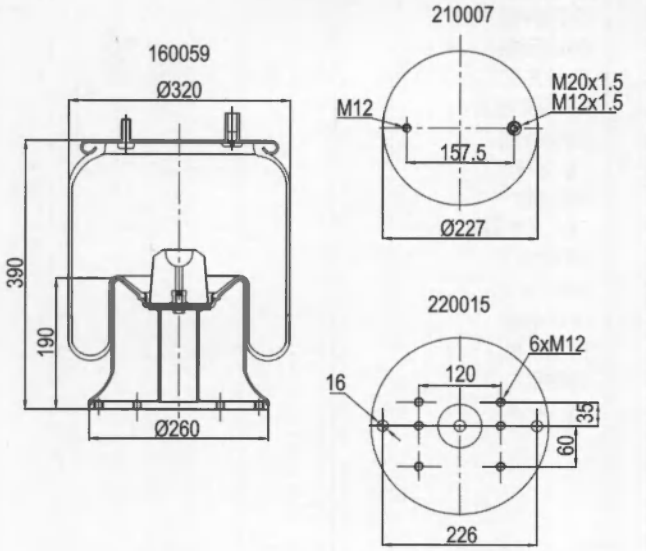

Order No
160059
weight(kg)
13.7
QIP(pcs)
25
Remarks

FIRESTONE
1T 15 M-9
AIRTECH
34159 K
CONNECT
MD 14159-K03

1604159-5CS

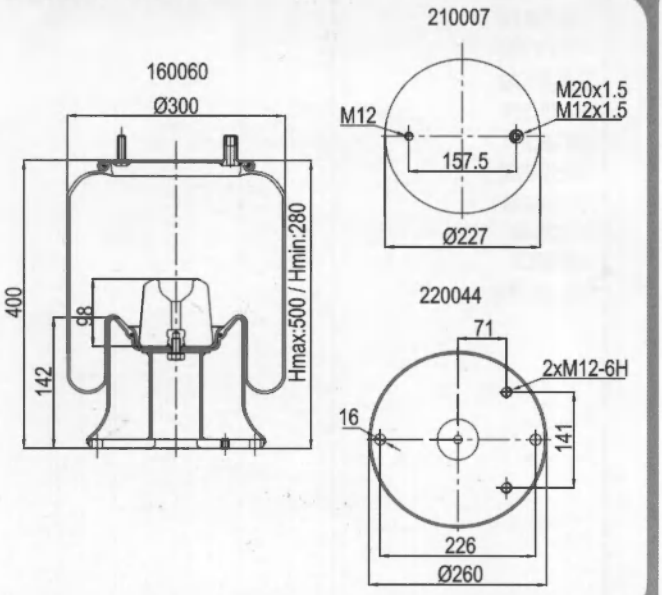

Order No
160060
weight(kg)
13.7
QIP(pcs)
25
Remarks

CONTITECH
4159 NP7
FIRESTONE
1 T15 M-9
W01 M58 8859 /379 9091
GOODYEAR
1R12 - 702
PHOENIX
1 DK 21 B6
AIRTECH
34159 K05
CF GOMMA
1 T353-40
CONNECT
MD 14159-K05

1604159-15CS

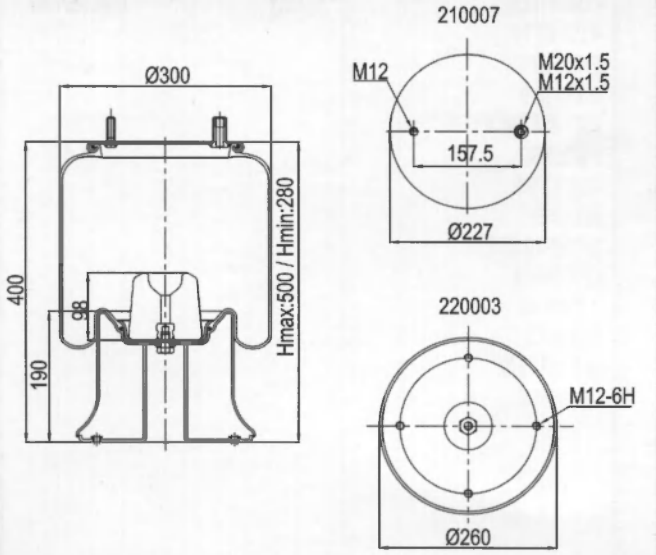

Order No

weight(kg)
14
QIP(pcs)
25
Remarks

CONNECT
MD 14159-K15

1604159-9CP

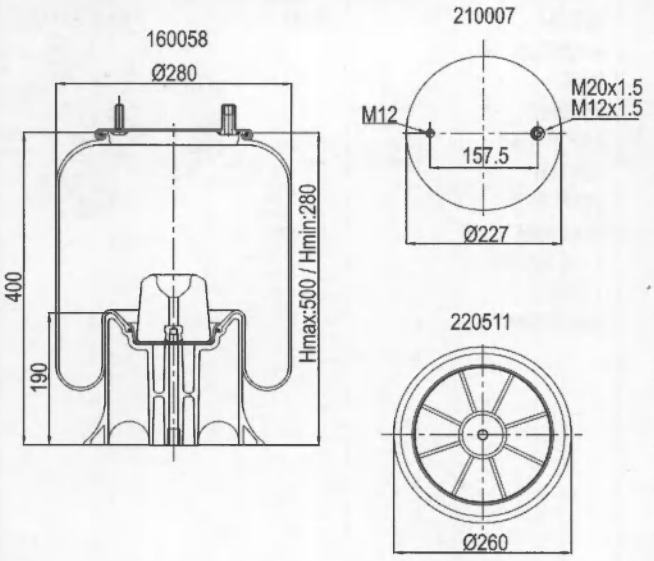

Order No	FIRESTONE
160058	1T 15 M-9
weight(kg)	W01 379 9131
7.5	GOODYEAR
QIP(pcs)	1 R12-721
25	PHOENIX
Remarks	1 DK 21 B8
	AIRTECH
	34159-02 KPP
	CF GOMMA
	1 T323-40
	CONNECT
	MD 14159-KP09

1604183

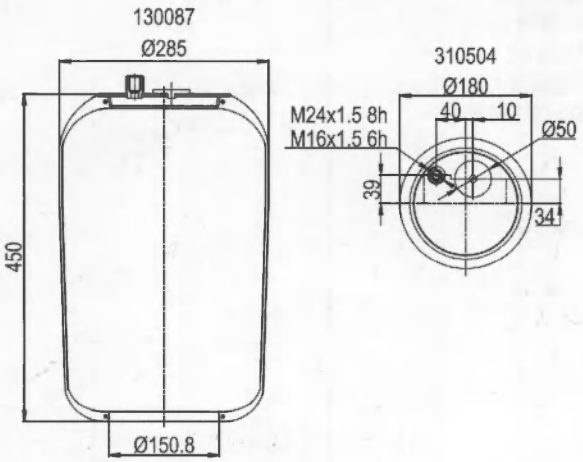

Order No	AIRTECH
130087	34183 P
weight(kg)	CONNECT
3.5	MD 14183
QIP(pcs)	
25	
Remarks	

1604183-CS

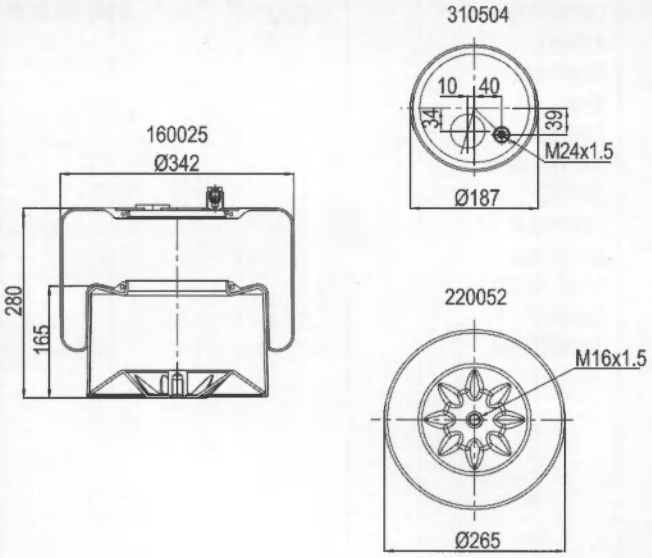

Order No	CONTITECH
160025	4183 NP 23
weight(kg)	AIRTECH
11.5	34183 K
QIP(pcs)	CONNECT
25	MD 14183-K
Remarks	

DAIMLER CHRYSLER A 942.320.22.21

1604390-1

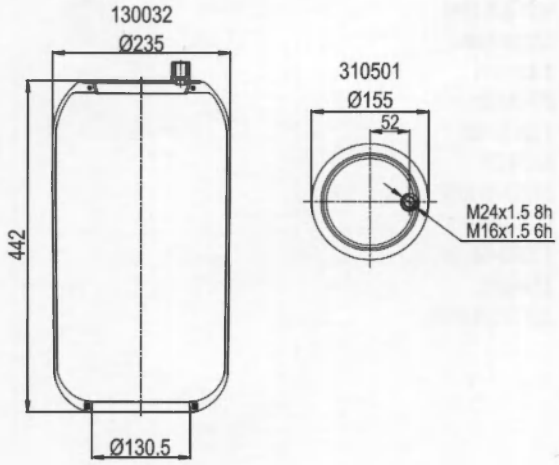

Order No
130032
weight(kg)
2.7
QIP(pcs)
30
Remarks

CONTITECH
4390 N1
GOODYEAR
9507
PHOENIX
1 KF 21-1 NP
AIRTECH
14390-01 P
CF GOMMA
1 VSC 285-30
CONNECT
MD 14390-01

GIGANT A 942 328 00 01
OMAR A 942.327.0001

1604390-1CS

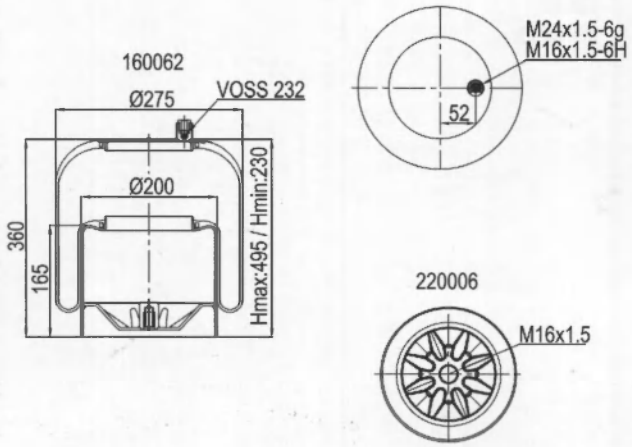

Order No
160062
weight(kg)
6.5
QIP(pcs)
30
Remarks

CONTITECH
4390 N P01
AIRTECH
34930 K01
CONNECT
MD 14390-K01

DAIMLER CHRYSLER A 942 320 01 21

1604390-2

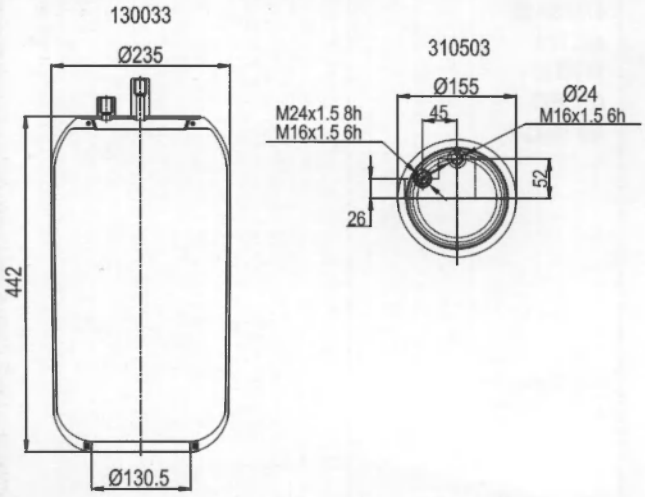

Order No
130033
weight(kg)
2.9
QIP(pcs)
30
Remarks

CONTITECH
4390 N2
GOODYEAR
9508
PHOENIX
1 KF21-2 NP
AIRTECH
14390-02 P
CF GOMMA
1 VSC 285-30
CONNECT
MD 14390-02

GIGANT A 942 328 01 01

1604390-2CS

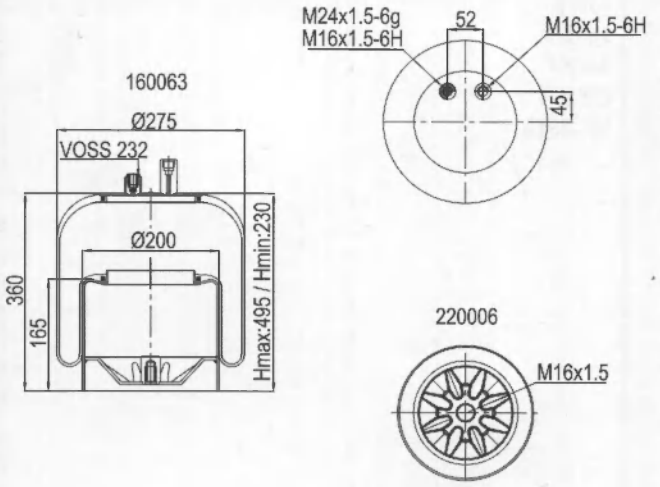

Order No 160063 weight(kg) 6.55 QIP(pcs) 30 Remarks	CONTITECH 4390 N P02 AIRTECH 34930 K02 CONNECT MD 14390-K02	DAIMLER CHRYSLER A 942 320 02 21

1604420-CS

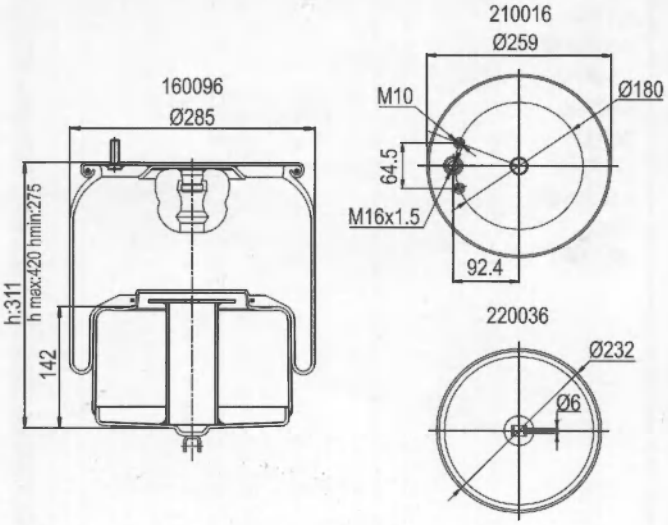

Order No 160096 weight(kg) 9.4 QIP(pcs) 25 Remarks	CONTITECH 4420 NP 01 AIRTECH 34420 K CF GOMMA 1 T 19-E2 CONNECT MD 14420-K	FRUEHAUF 431487

1604506-CS

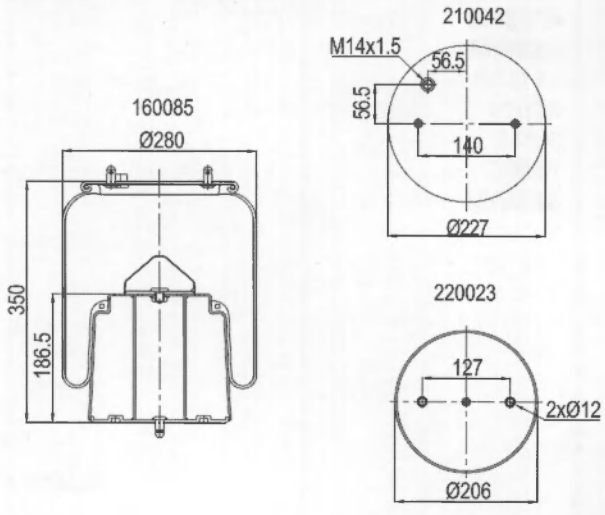

Order No 160085 weight(kg) 7.6 QIP(pcs) 30 Remarks	AIRTECH 334506 K CONNECT MD 14506-K	SCANIA + SCANIA BUSSAR 473868 488264 1434506

1604644

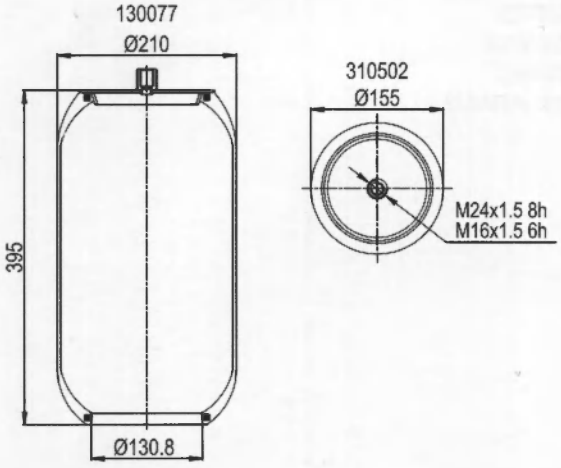

Order No 130077 weight(kg) 2.6 QIP(pcs) 30 Remarks	CONTITECH 4644 N AIRTECH 34644 P CONNECT MD 14644	OMAR	A 629.320.00.25

1604713

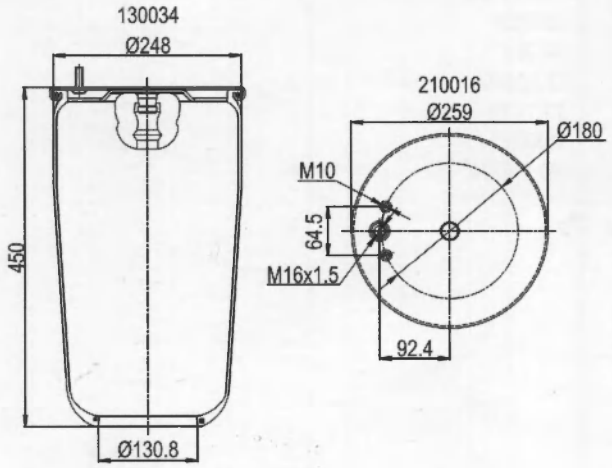

Order No 130034 weight(kg) 4.4 QIP(pcs) 30 Remarks	CONTITECH 4713 N GOODYEAR 1 R12 763 AIRTECH 34713 P CF GOMMA 1 TS 300-28 CONNECT MD 14713		

1604713-CS

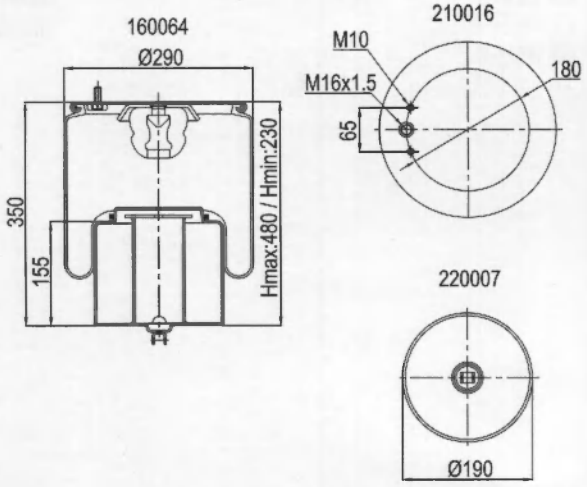

Order No 160064 weight(kg) 8 QIP(pcs) 30 Remarks	CONTITECH 4713 NP 02 GOODYEAR 1 R 12-762 AIRTECH 34713 K CONNECT MD 14713-K	VOLVO	1076594

1604718-CS

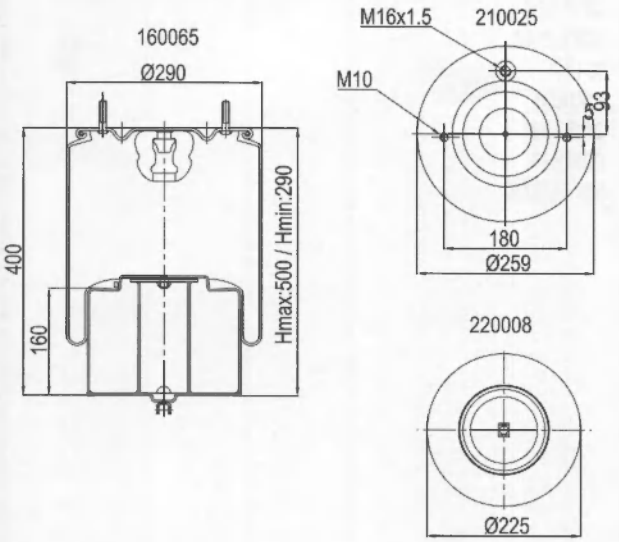

Order No 160065 weight(kg) 8.1 QIP(pcs) 22 Remarks	CONTITECH 4718 N AIRTECH 34718 K CONNECT MD 14718-K	VOLVO 1075363

1604737-2CS

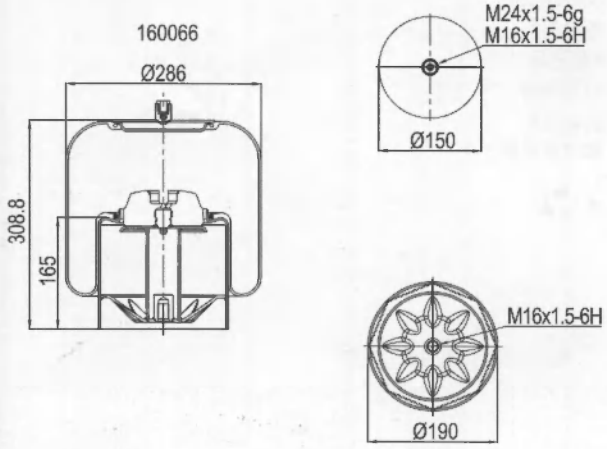

Order No 160066 weight(kg) 8.4 QIP(pcs) 25 Remarks	CONTITECH 4737 NP 02 AIRTECH 34737 K02 CONNECT MD 14737-K02	DAIMLER CHRYSLER A 946 320 05 21

1604757

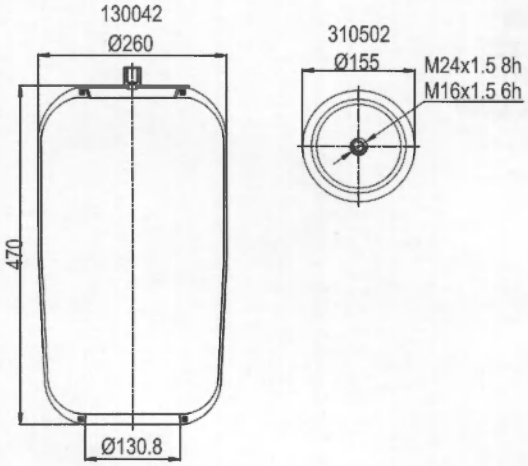

Order No 130042 weight(kg) 3 QIP(pcs) 25 Remarks	CONTITECH 4757 N1 GOODYEAR 9517 AIRTECH 34757-01P CONNECT MD 14757	

1604757-CS

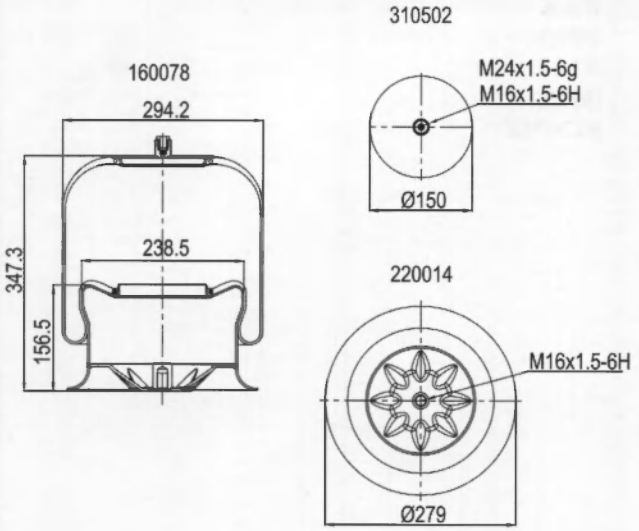

Order No
160078
weight(kg)
8.1
QIP(pcs)
25
Remarks

CONTITECH
4757 NP 01
GOODYEAR
9517
AIRTECH
34757 K01
CONNECT
MD 14757-K

DAIMLER CHRYSLER A 942 320 01 17

1604757-9

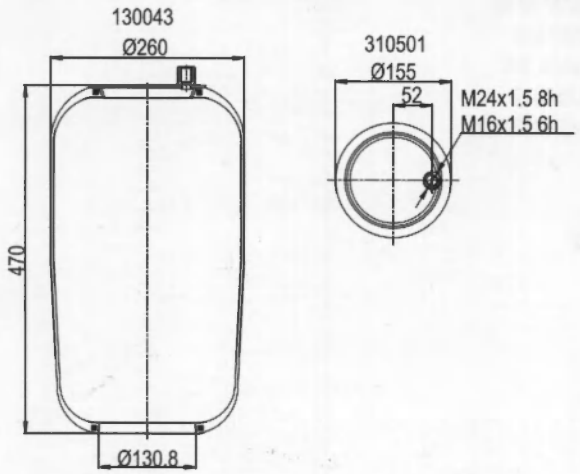

Order No
130043
weight(kg)
3
QIP(pcs)
25
Remarks

CONTITECH
4757 N2
GOODYEAR
9518
AIRTECH
34757-02P
CONNECT
MD 14757-09

1604757-9CS

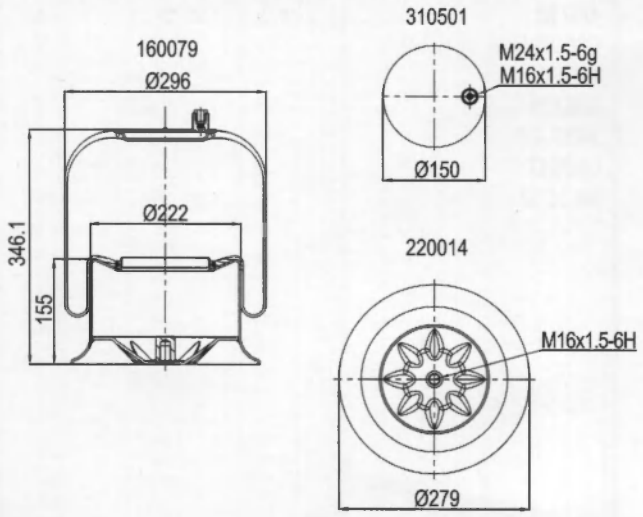

Order No
160079
weight(kg)
7.9
QIP(pcs)
25
Remarks

CONTITECH
4757 NP 09
AIRTECH
34757 K02
CONNECT
MD 14757-K09

DAIMLER CHRYSLER A 942 320 02 17

1604810-5CS

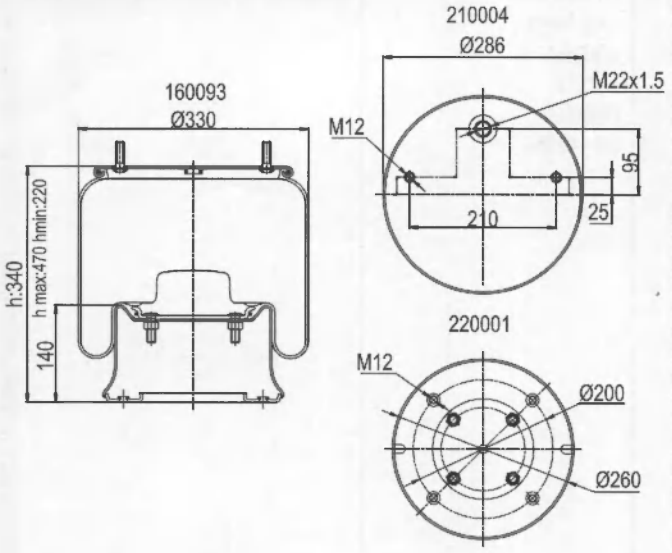

Order No
160093
weight(kg)
11
QIP(pcs)
22
Remarks

CONTITECH
4810 NP 05
FIRESTONE
1T19L-7
W01 M58 6338
GOODYEAR
1R14 - 730
AIRTECH
32918 K
CF GOMMA
1T19 E2 - 204676
CONNECT
MD 14810-K05

SCANIA + SCANIA BUSSAR 475149
470919
1440307

1604813

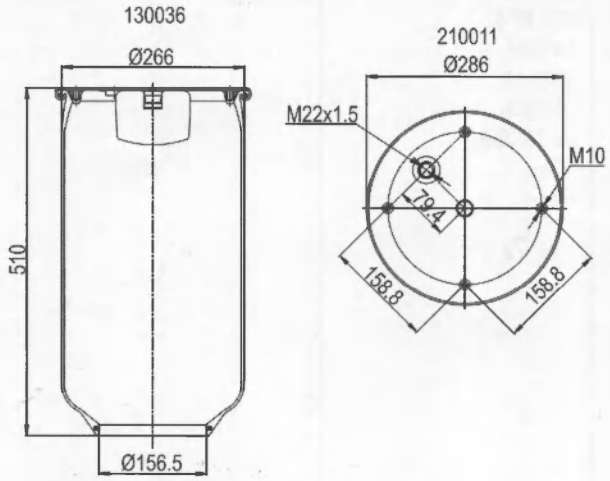

Order No
130036
weight(kg)
5.4
QIP(pcs)
22
Remarks

FIRESTONE
1T19 L-11
W01 M58 0918
AIRTECH
34813 P
CONNECT
MD 14813

1604813-CS

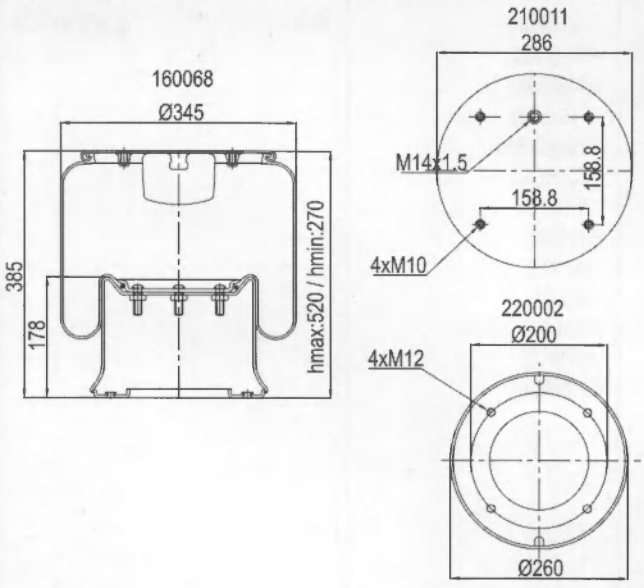

Order No
160068
weight(kg)
11.6
QIP(pcs)
22
Remarks

CONTITECH
4813 N P07
FIRESTONE
1T 19 F-11
W01 M58 7358
GOODYEAR
1 R 14-727
PHOENIX
1 D 28 B-9
AIRTECH
34813 K
CF GOMMA
1 T 19 E-2 BR
CONNECT
MD 14813-K

S.A.F 3.229.0005.00
SCANIA + SCANIA BUSSAR 255295

1604838

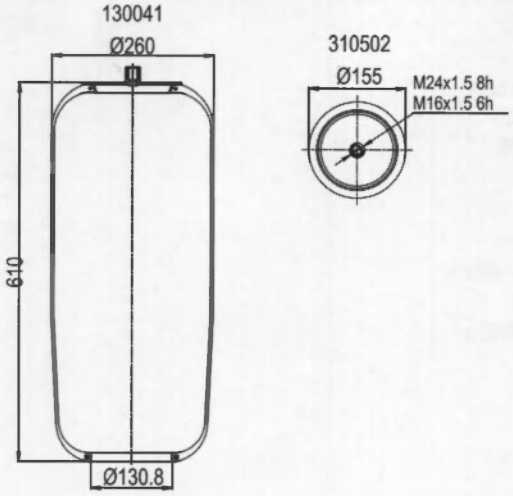

Order No 130041 weight(kg) 3.5 QIP(pcs) 30 Remarks	CONTITECH 4838 NP 03 AIRTECH 34838 P CONNECT MD 14838	GIGANT	A 946 320 04 21

1604838-CS

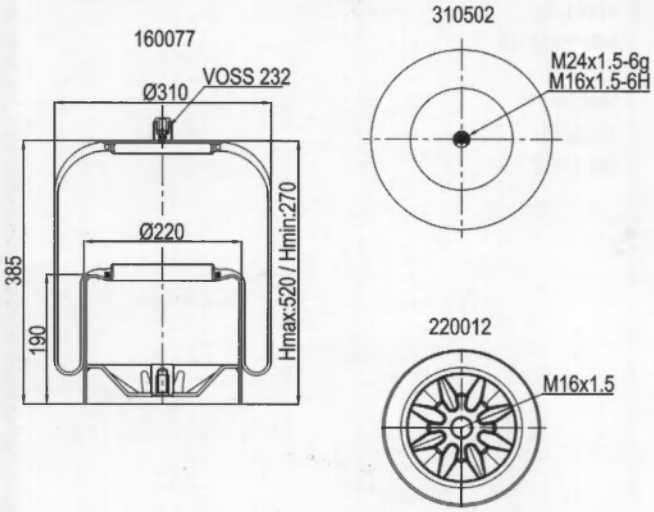

Order No 160077 weight(kg) 8.5 QIP(pcs) 25 Remarks	CONTITECH 4838 NP 01 AIRTECH 34838 K01 CONNECT MD 14838-K	DAIMLER CHRYSLER	A 946 320 04 21

1604881

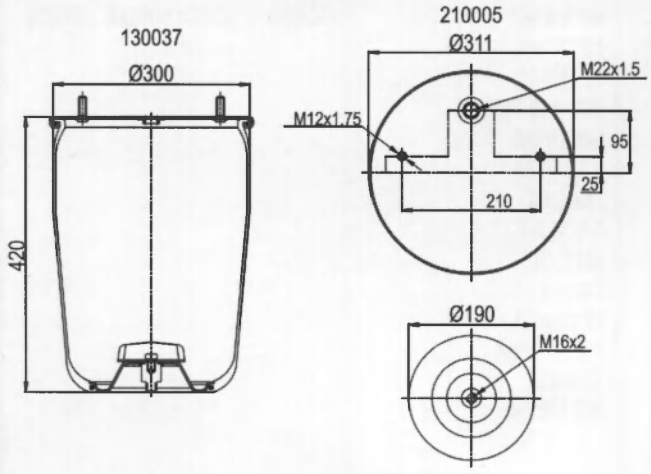

Order No 130037 weight(kg) 6.3 QIP(pcs) 20 Remarks	CONTITECH 4881 N P02 FIRESTONE 1T 66 F-7.0 W01 M58 8601 GOODYEAR 1 R 14-701 PHOENIX 1 DK 32 K AIRTECH 34881 P CONNECT MD 14881	BPW	05.429.41.01.0

1604881-CS

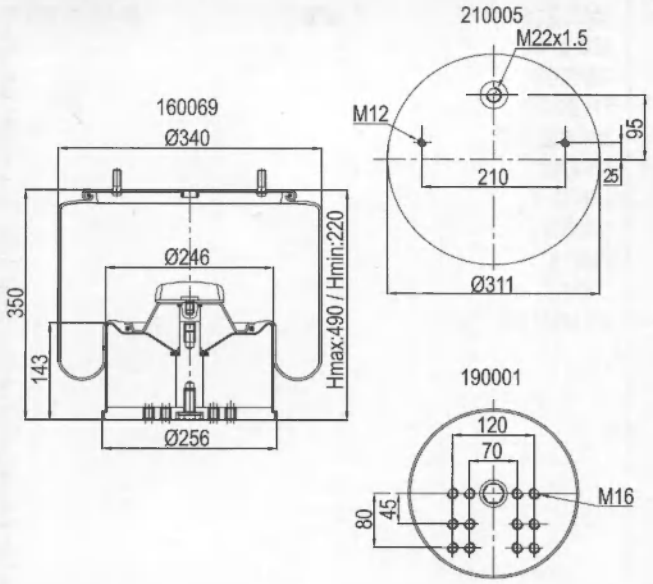

Order No	CONTITECH
160069	4881 MB
weight(kg)	FIRESTONE
15.6	1T 66D-7.0
QIP(pcs)	W01 M58 8602
20	GOODYEAR
Remarks	1R14 - 724
	PHOENIX
	1 DK 32 K
	AIRTECH
	34881 K01
	CONNECT
	MD 14881-K

1604881-CP

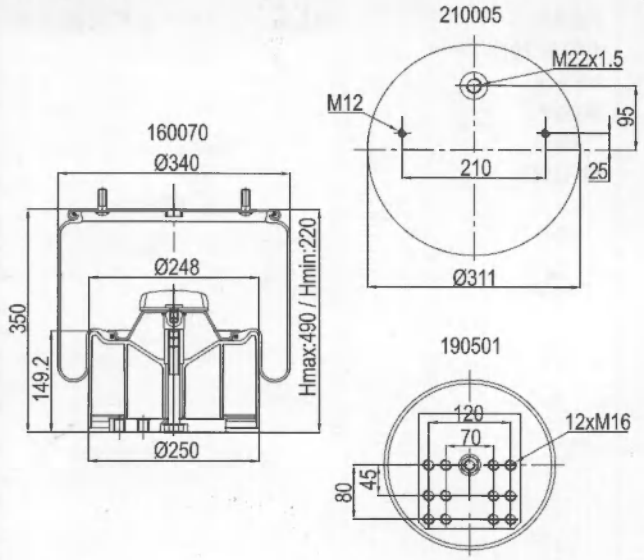

Order No	AIRTECH
160070	34881 KP01
weight(kg)	CONNECT
12.4	MD 14881-KP
QIP(pcs)	
20	
Remarks	

1604881-1CP

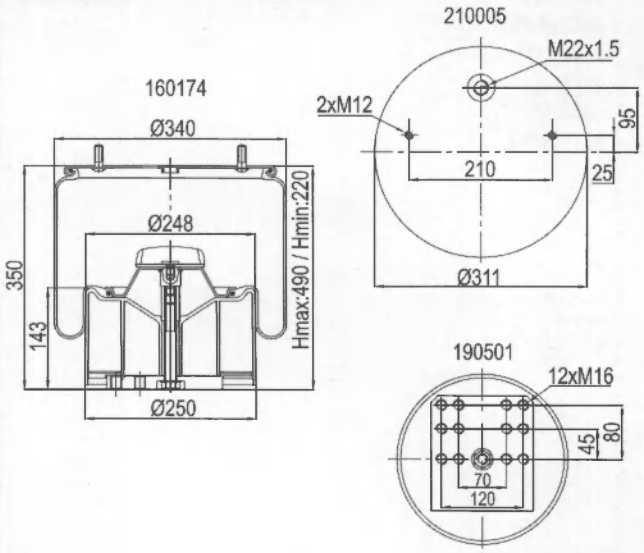

Order No	CONNECT
160174	MD 14881-KP01
weight(kg)	
12.4	
QIP(pcs)	
20	
Remarks	

1604881-1CS

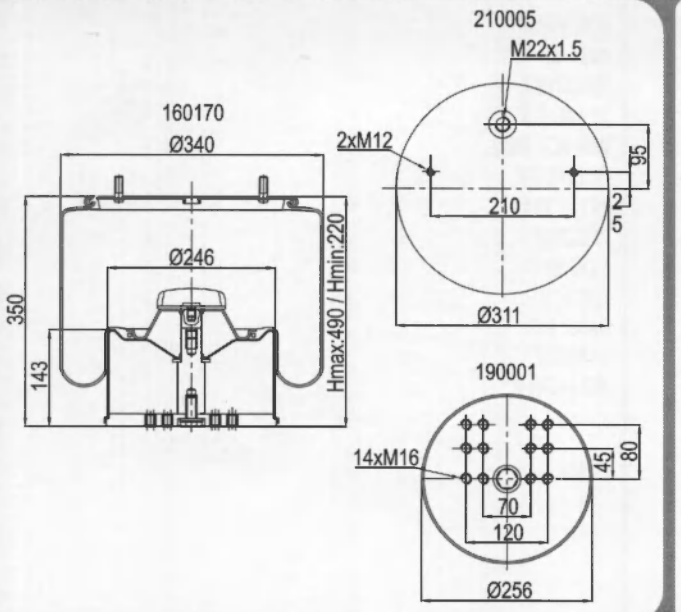

Order No 160170 weight(kg) 15.6 QIP(pcs) 20 Remarks	CONTITECH 4881 N P02 FIRESTONE 1T 66D-7.0 W01 M58 8601 PHOENIX 1 DK 32 K AIRTECH 34881 K CONNECT MD 14881-K01	BPW	05.429.41.010

1604882

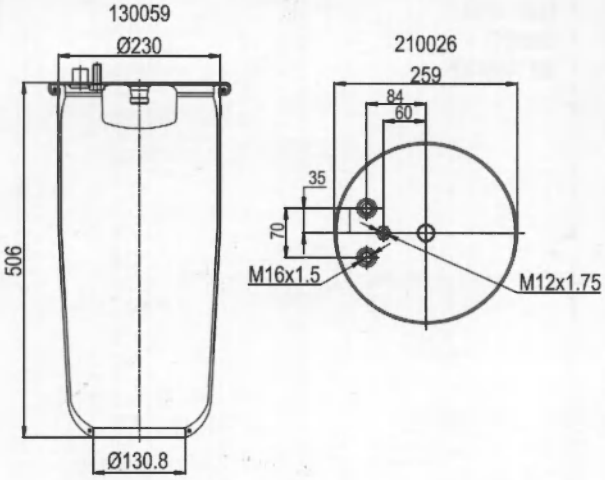

Order No 130059 weight(kg) 4.8 QIP(pcs) 3 Remarks	CONTITECH 4882 N1 P01 AIRTECH 34882 P CONNECT MD 14882	M.A.N	81.43601.0.151

1604882-CS

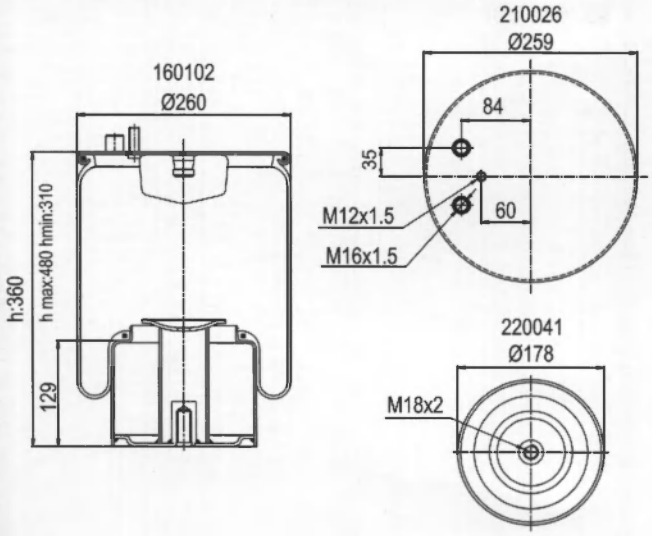

Order No 160102 weight(kg) 6.8 QIP(pcs) 30 Remarks	CONTITECH 4882 N1 P05 AIRTECH 34882 K CONNECT MD 14882-K	M.A.N	81436016036

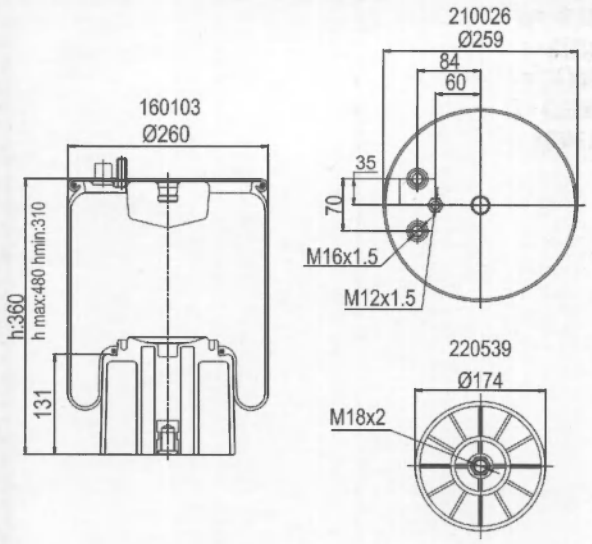

Order No 160103 weight(kg) 5.3 QIP(pcs) Remarks	CONTITECH 4883 N1 P07	M.A.N 81436016038

1604883

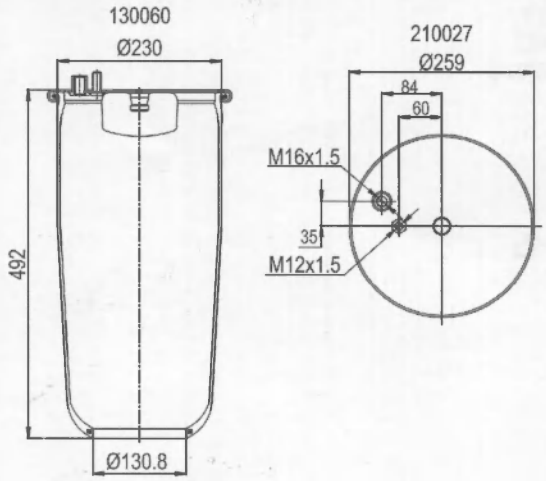

Order No 130060 weight(kg) 4.7 QIP(pcs) 30 Remarks	CONTITECH 4883 N1 P01 AIRTECH 34883 P CONNECT MD 14883	M.A.N 81.43601.0.153

1604883-CS

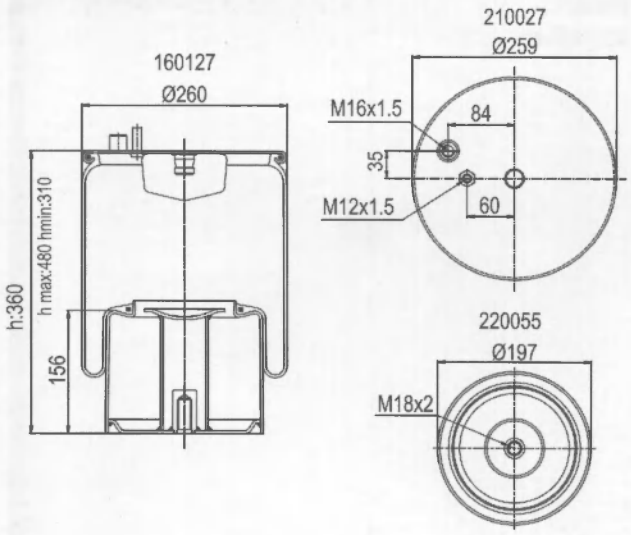

Order No 160127 weight(kg) 6.7 QIP(pcs) 0 Remarks	CONTITECH 4884 N1 P06 AIRTECH 34883 K CONNECT MD 14883-K	M.A.N 81436016035

1604884

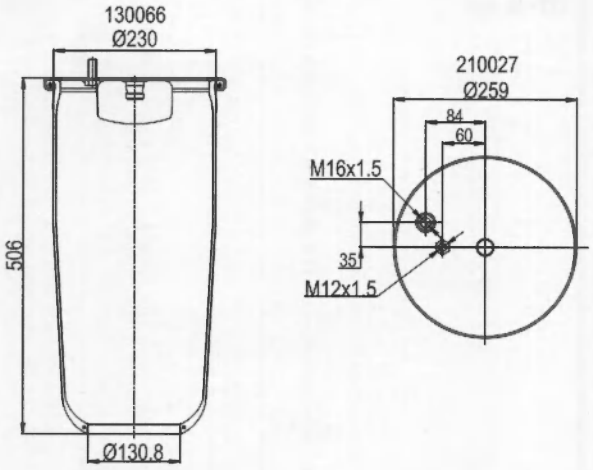

Order No	CONTITECH	ZORZI	81.43601.0.152
130066	4884 N1 P01		
weight(kg)	AIRTECH		
4.7	34884 P		
QIP(pcs)	CONNECT		
30	MD 14884		
Remarks			

1604884-CS

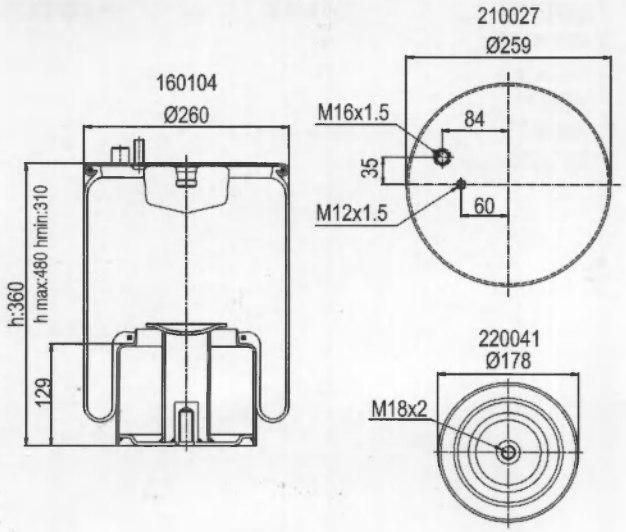

Order No	AIRTECH
160104	34884 K
weight(kg)	CONNECT
6.7	MD 14884-K
QIP(pcs)	
Remarks	

1604884-CP

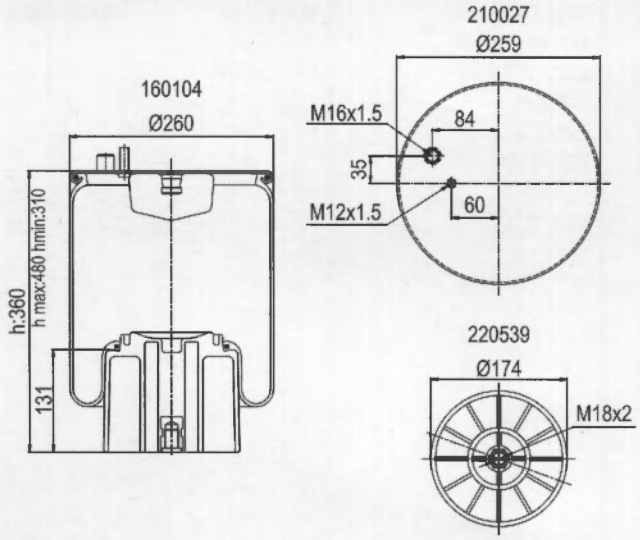

Order No	CONNECT
160104	MD 14884-KP
weight(kg)	
5.2	
QIP(pcs)	
0	
Remarks	

AIR EXPERT

1604911

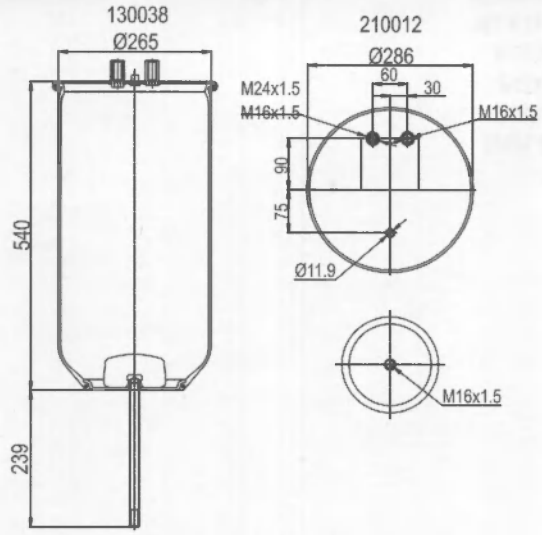

Order No	CONTITECH
130038	4911 N
weight(kg)	AIRTECH
6.6	34911 P
QIP(pcs)	CONNECT
22	MD 14911
Remarks	

1604911-CS

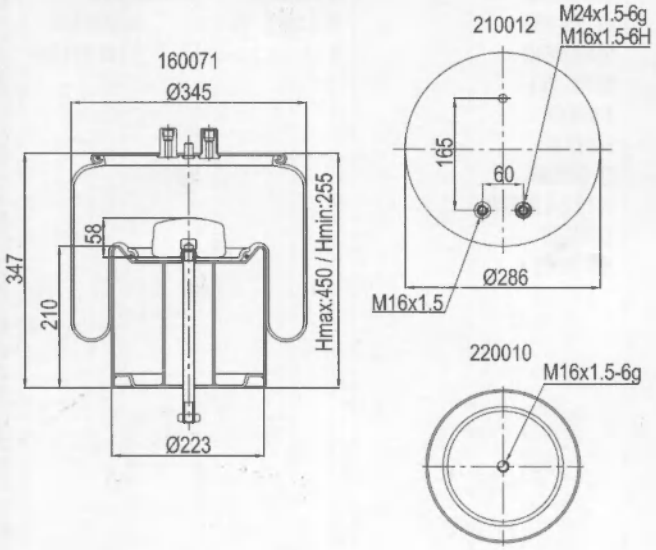

Order No	CONTITECH
160071	4911 N P01
weight(kg)	GOODYEAR
13.4	1R13 - 714
QIP(pcs)	AIRTECH
22	34911 K
Remarks	CONNECT
	MD 14911-K

RENAULT V.I	5010239971
R.V.I	5 010 294 308 C

1600912-CS

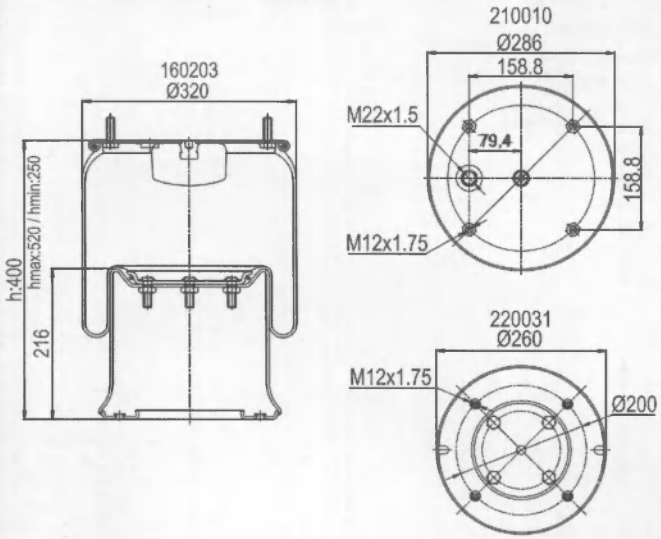

Order No	CONTITECH
160203	912 N P02
weight(kg)	FIRESTONE
12.54	1T19L 14
QIP(pcs)	W01 M58 8766
22	PHOENIX
Remarks	1D28D2
	GOODYEAR
	1R14-758
	CF GOMMA
	1T 19 E-4
	AIRTECH
	9212 K
	CONNECT
	MD 1912-K

FRUEHAUF	M060770
HENDRICKSON	507782
R.O.R. MERITOR	21222673
S.A.F	3.229.0006.01
WEWELER	US 96681

1604912

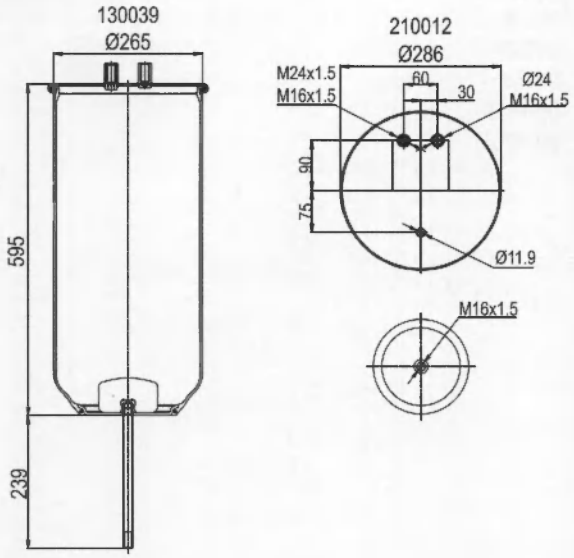

Order No 130039 weight(kg) 6.8 QIP(pcs) 22 Remarks	CONTITECH 4912 N P08 AIRTECH 34912 P CONNECT MD 14912	

1604912-CS

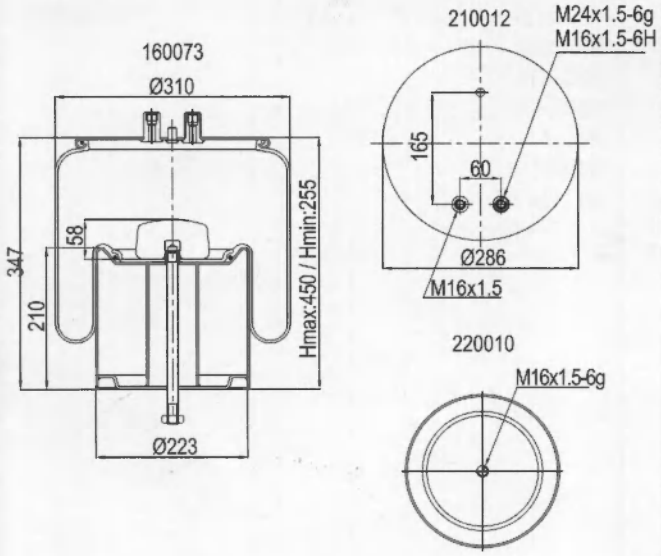

Order No 160073 weight(kg) 14 QIP(pcs) 22 Remarks	CONTITECH 4912 N P05 GOODYEAR 1R13 - 711 AIRTECH 34912 K CF GOMMA 1T19 E-4 206779 CONNECT MD 14912-K	GRANNING 15910 RENAULT V.I 5010294307 R.V.I 5 010 294 307

1600912-2CS

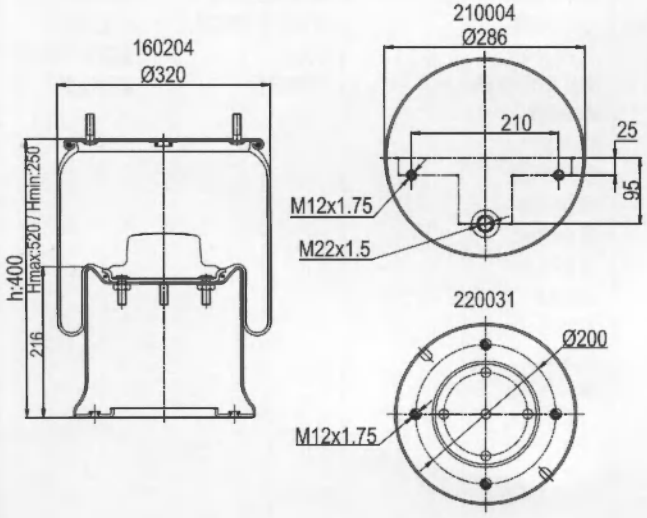

Order No 160204 weight(kg) 14.8 QIP(pcs) 22 Remarks	CONTITECH 912 N P01 AIRTECH 32926 K CONNECT MD 1912-K02	S.A.F 3.229.0030.00 WEWELER US 07380

AIR EXPERT

1604913

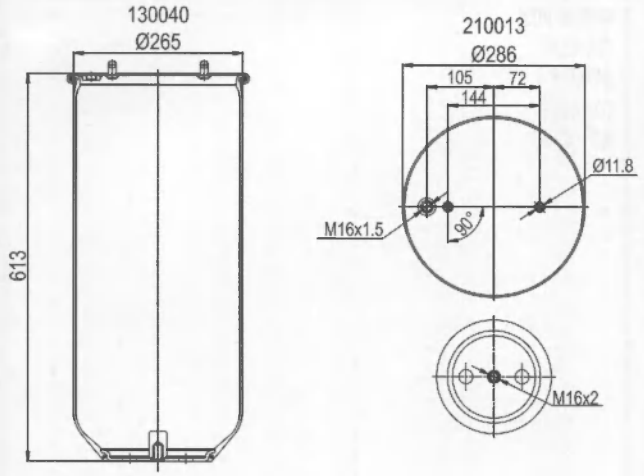

Order No 130040 weight(kg) 6.4 QIP(pcs) 22 Remarks	CONTITECH 4913 N P04 FIRESTONE 1T 19 L-14 W01 095 0365 GOODYEAR 1 R 14 755 AIRTECH 34913 P CONNECT MD 14913	

1604913-CS

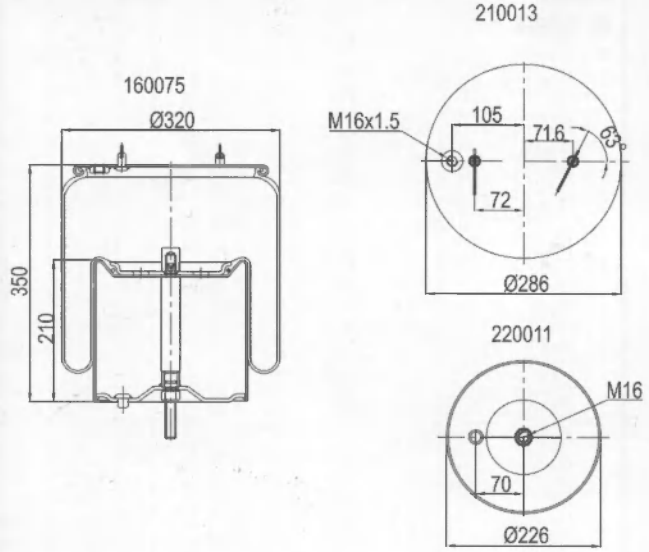

Order No 160075 weight(kg) 13 QIP(pcs) 22 Remarks	CONTITECH 4913 N P02 FIRESTONE 1T 19 F-14 W01 095 0366 GOODYEAR 1R14 - 753 PHOENIX 1D28H - 16 AIRTECH 34913 K CF GOMMA 1T19E-9.3 206201 CONNECT MD 14913-K	SCANIA + SCANIA BUSSAR 1379392

1604925-CS

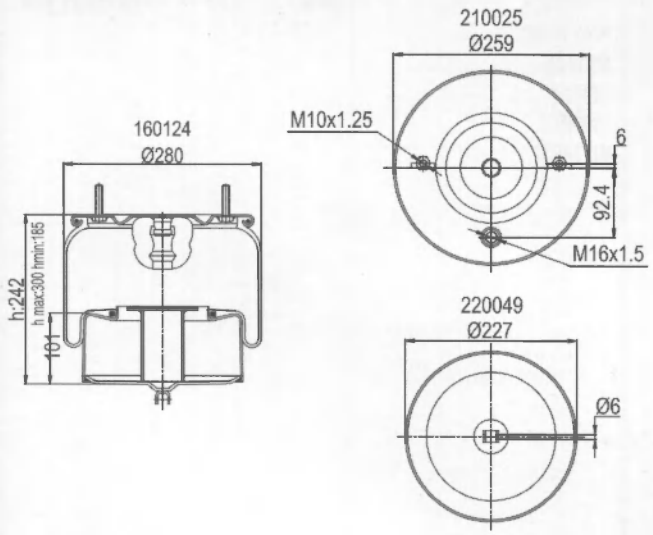

Order No 160124 weight(kg) 8.1 QIP(pcs) 30 Remarks	CONTITECH 4925 N AIRTECH 34925 CONNECT MD 14925-K	VOLVO 1075365

1604940

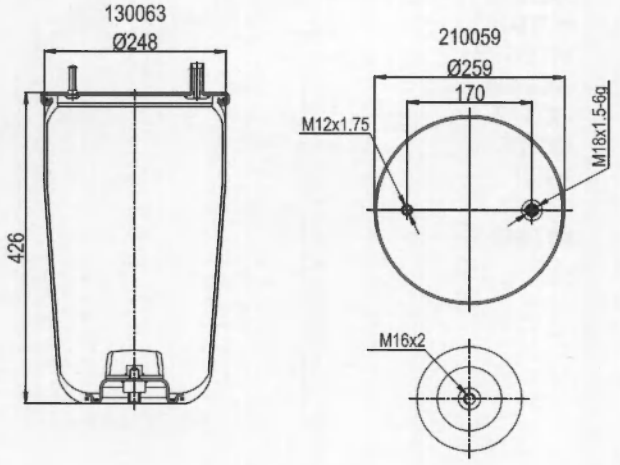

Order No 130063 weight(kg) 4.8 QIP(pcs) 30 Remarks	CONTITECH 4940 N P02 AIRTECH 34940 P CONNECT MD 14940	BPW 05.429.41.56.0

1604940-CS

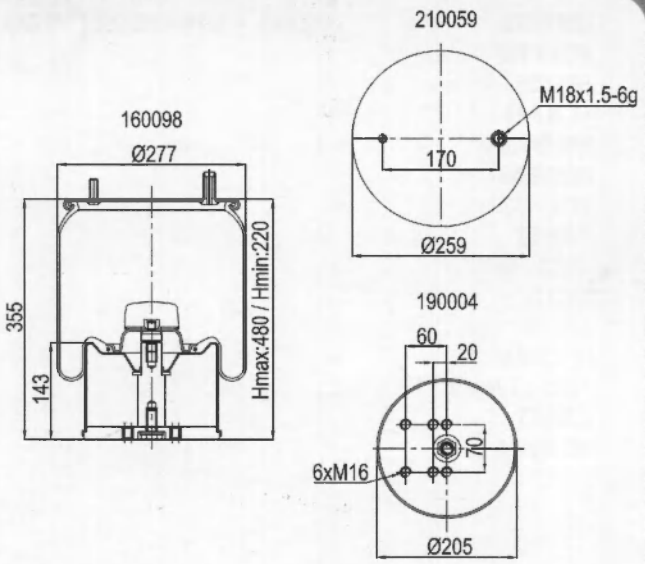

Order No 160098 weight(kg) 11.4 QIP(pcs) 0 Remarks	CONNECT MD 14940-K	

1604941

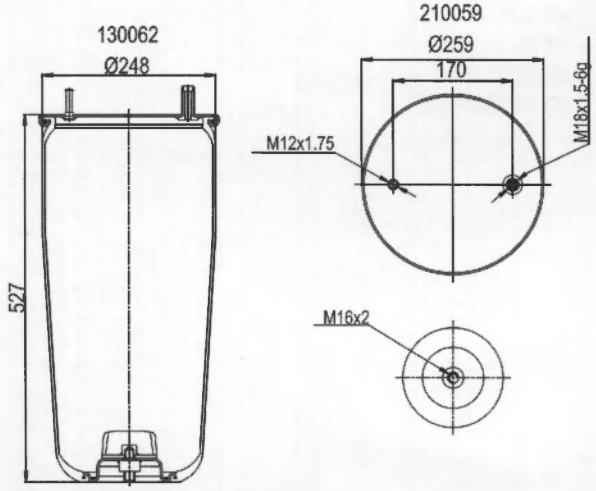

Order No 130062 weight(kg) 4.9 QIP(pcs) 30 Remarks	CONTITECH 4941 N P02 AIRTECH 34941 P CONNECT MD 14941	BPW 05.429.41.25.0

1604941-CS

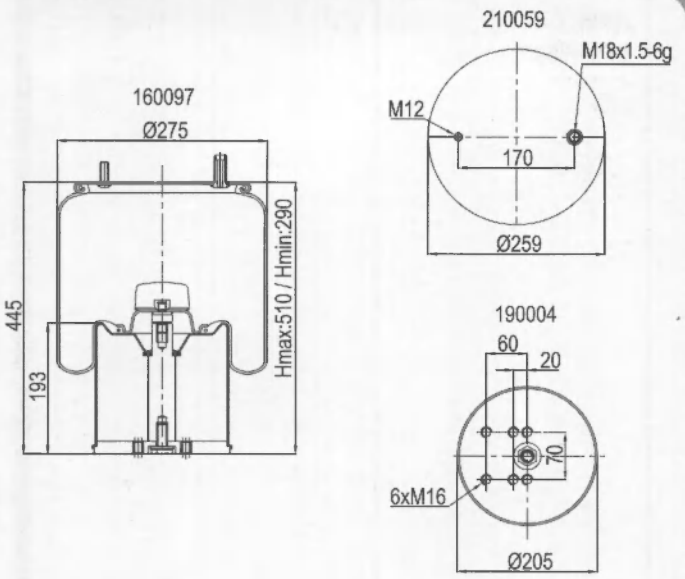

Order No	AIRTECH	
160097	34941 K	
weight(kg)	CONNECT	
12.3	MD 14941-K	
QIP(pcs)		
30		
Remarks		

1604960

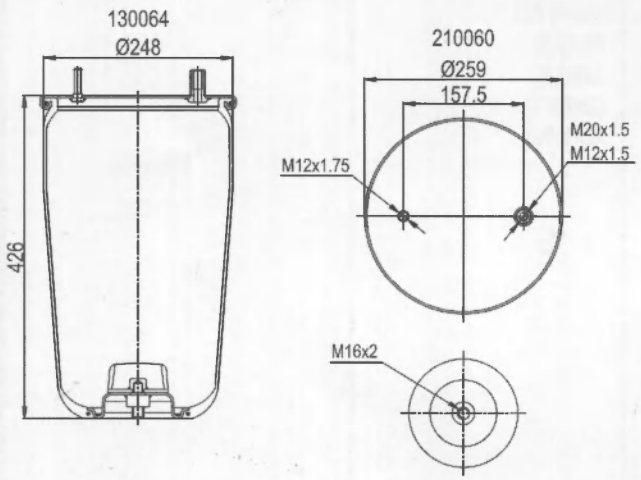

Order No	CONTITECH	BPW	05.429.41.77.0
130064	4960 N P02		
weight(kg)	AIRTECH		
4.8	34960 P		
QIP(pcs)	CONNECT		
30	MD 14960		
Remarks			

1604960-CS

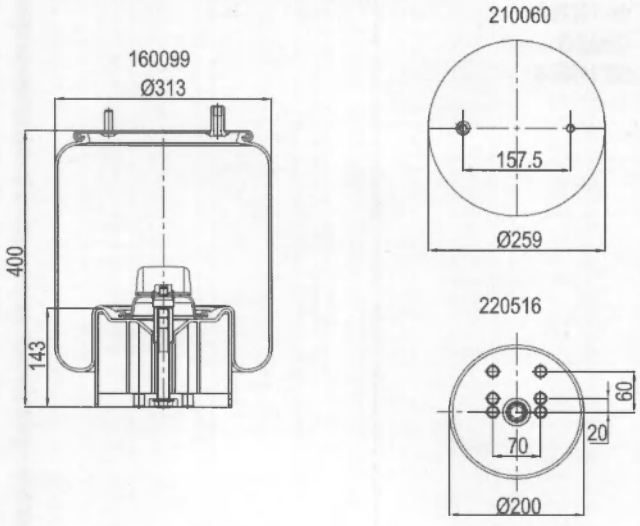

Order No	CONTITECH	BPW	05.429.41.77.0
160099	4960 N P02		
weight(kg)	AIRTECH		
11.4	34960 K		
QIP(pcs)	CONNECT		
30	MD 14960-K		
Remarks			

1604960-CP

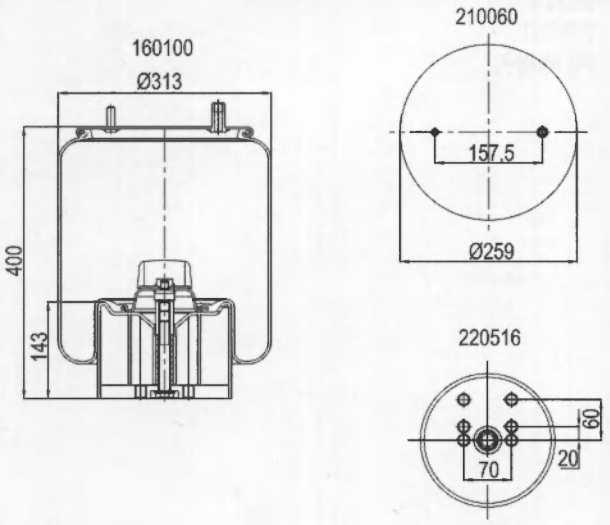

Order No	CONNECT	
160100	MD 14960-KP	
weight(kg)		
9		
QIP(pcs)		
30		
Remarks		

1604961

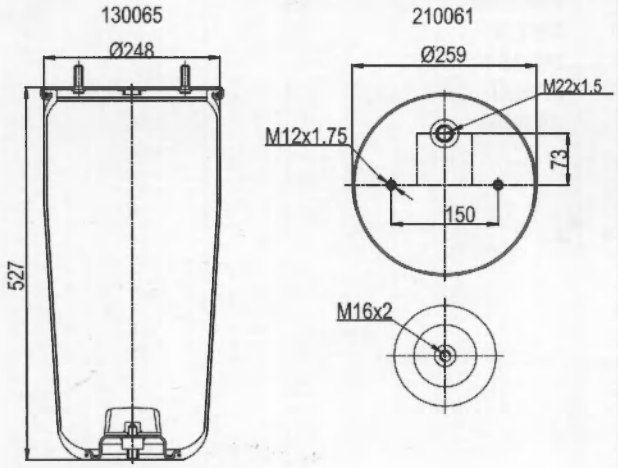

Order No	CONTITECH	BPW	05.429.42.04.0
130065	4961 N P02		
weight(kg)	AIRTECH		
4,9	34961 P		
QIP(pcs)	CONNECT		
30	MD 14961		
Remarks			

1604961-CS

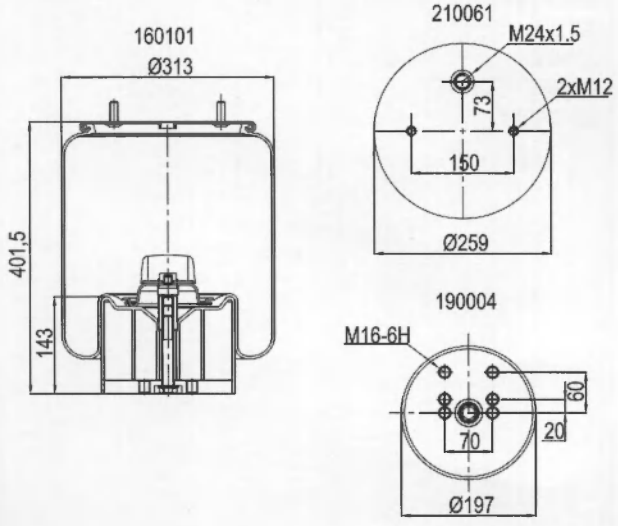

Order No	CONTITECH
160101	4961 N P02
weight(kg)	CONNECT
11,4	MD 14961-K
QIP(pcs)	
30	
Remarks	

1606199-CS

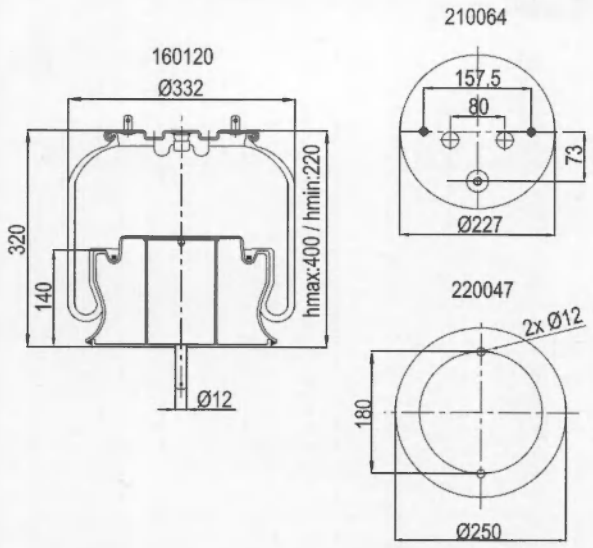

Order No	AIRTECH	SCANIA + SCANIA BUSSAR 1386199
160120	36199 K	
weight(kg)	CONNECT	
9,6	MD 16199-K	
QIP(pcs)		
25		
Remarks		

1606200-CS

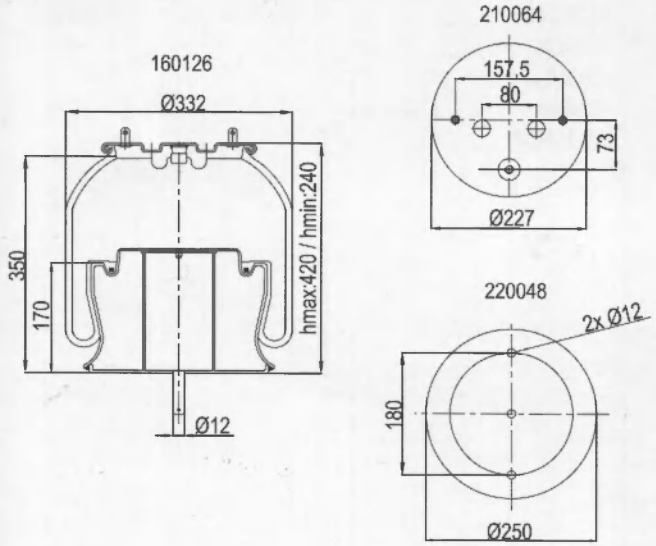

Order No	AIRTECH	SCANIA + SCANIA BUSSAR 1386200
160126	36200 K	
weight(kg)	CONNECT	
10	MD 16200-K	
QIP(pcs)		
25		
Remarks		

1603007-CP

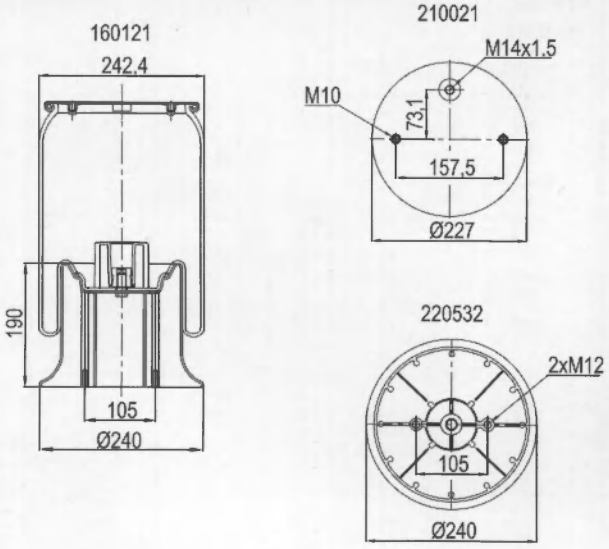

Order No	FIRESTONE	SCANIA + SCANIA BUSSAR 1363007
160121	1T15LUX-11	
weight(kg)	W01 M58 8948	
8	CONNECT	
QIP(pcs)	MD 163007-KP	
20		
Remarks		

1606416

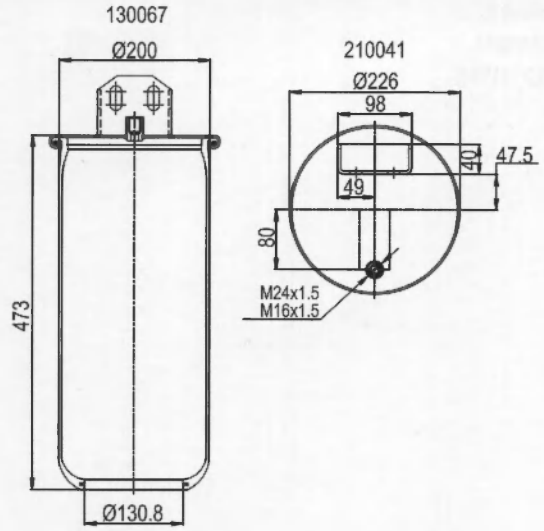

Order No 130067 weight(kg) 2,1 QIP(pcs) 30 Remarks	CONNECT MD 16416	

1606416-CS

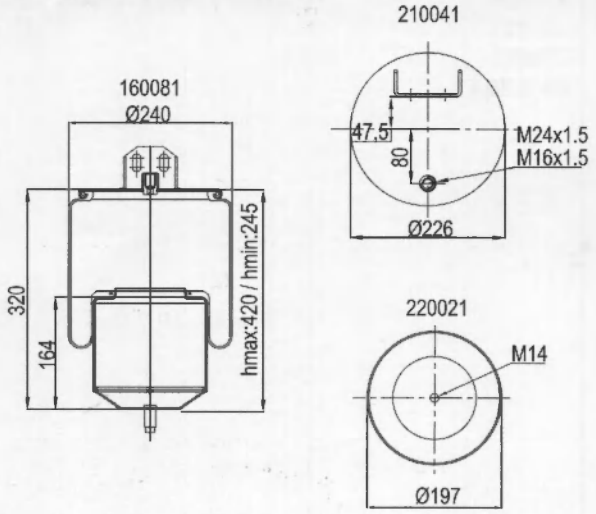

Order No 160081 weight(kg) 6,1 QIP(pcs) 30 Remarks	CONTITECH 6608 N P01 AIRTECH 36416 K CONNECT MD 16416-K	VOLVO 2058215 1076416

1606418

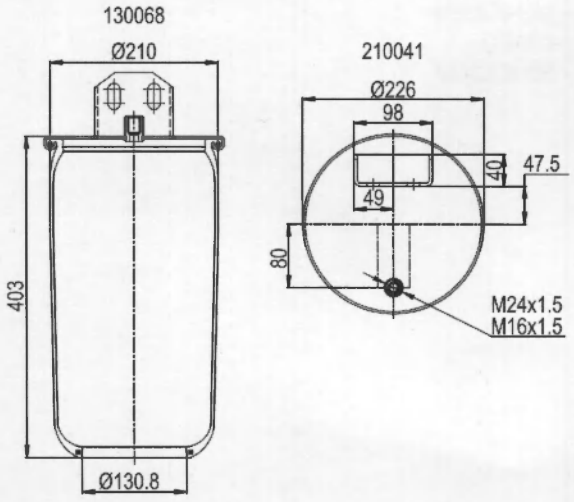

Order No 130068 weight(kg) 2,3 QIP(pcs) 30 Remarks	CONNECT MD 16418	

1606418-CS

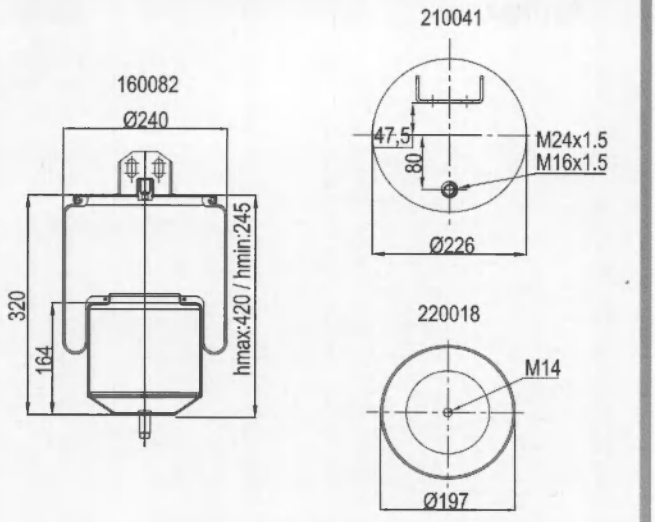

Order No
160082
weight(kg)
5,6
QIP(pcs)
30
Remarks

CONTITECH
6607 N P01
AIRTECH
36418 K
CONNECT
MD 16418-K

VOLVO 2058214
1076418

1606604-CS

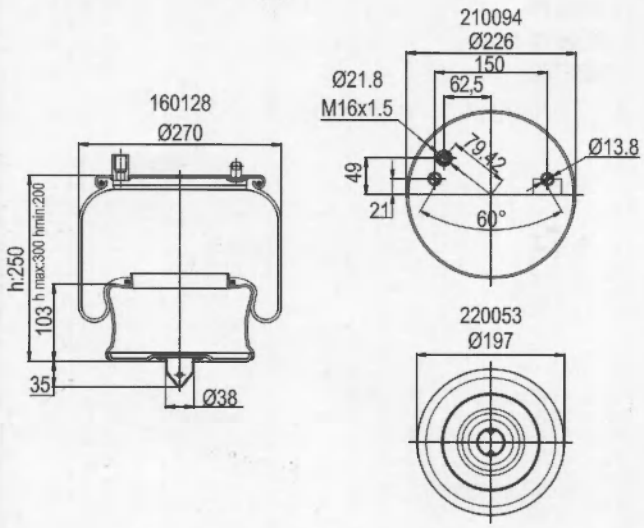

Order No
160128
weight(kg)

QIP(pcs)

Remarks

CONTITECH
6604 N P01
CONNECT
MD 16604-K

VOLVO 20573108

1607315-CP

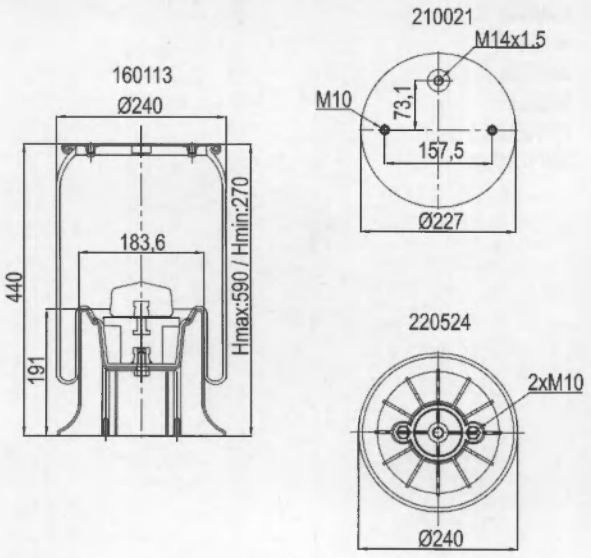

Order No
160113
weight(kg)
7,8
QIP(pcs)
20
Remarks

FIRESTONE
1 T 15 S 11
W01 M58 7315
CONNECT
MD 17315-KP

SAMRO 1314906

1607783-CS

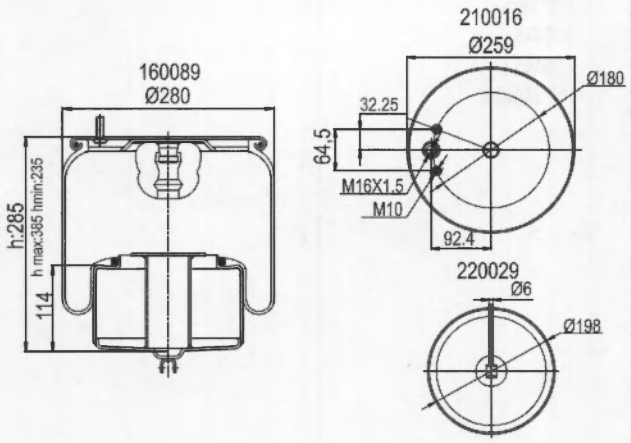

Order No	CONNECT	VOLVO	20554772
160089	MD 17783-K		3987783
weight(kg)			
7,1			
QIP(pcs)			
30			
Remarks			

1607803

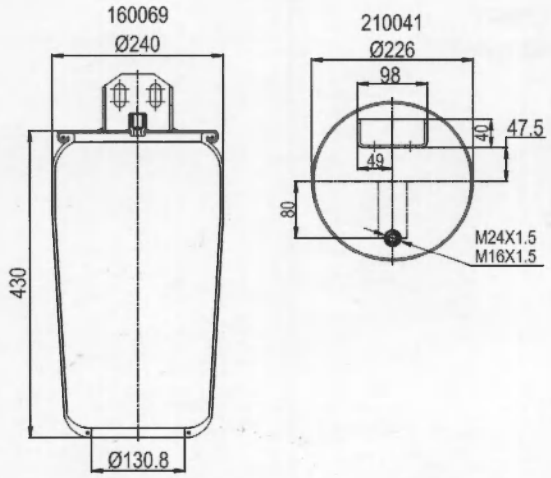

Order No	AIRTECH
160069	37803 P
weight(kg)	CONNECT
3,5	MD 17803
QIP(pcs)	
30	
Remarks	

1607803-CS

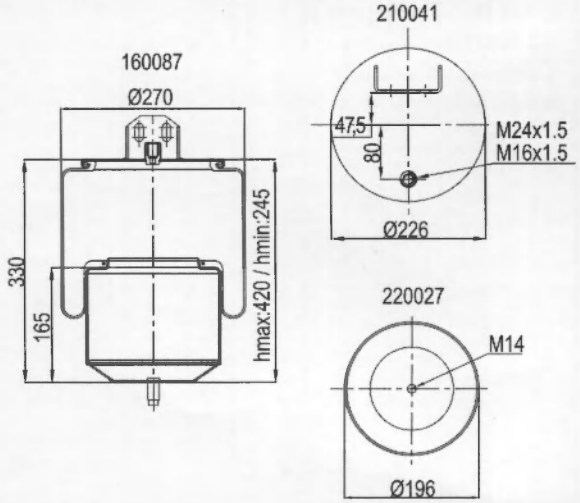

Order No	CONTITECH
160087	6605 N01
weight(kg)	AIRTECH
6,4	37803 K
QIP(pcs)	CONNECT
30	MD 17803-K
Remarks	

1607804

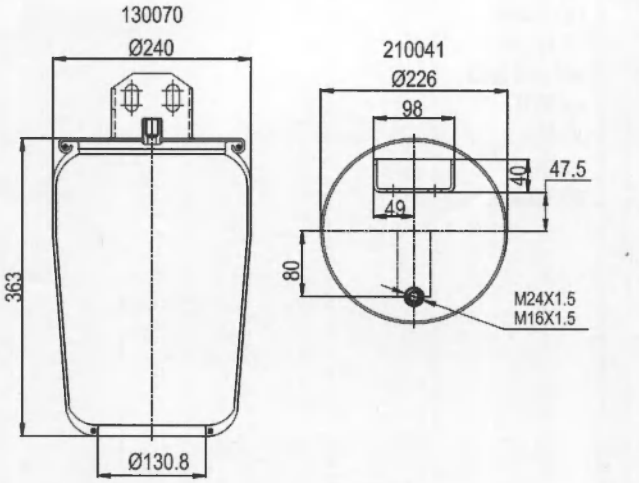

Order No 130070 weight(kg) 3,1 QIP(pcs) 30 Remarks	CONTITECH 6601 N01 AIRTECH 37804 K CONNECT MD 17804	VOLVO 20582209 3171694

1607804-CS

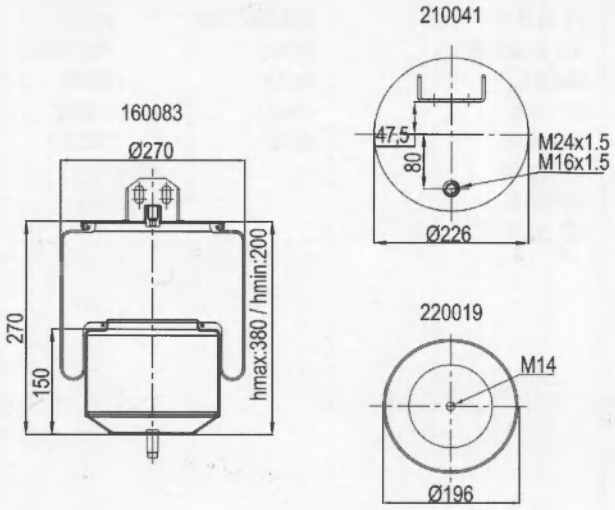

Order No 160083 weight(kg) 6,1 QIP(pcs) 30 Remarks	CONTITECH 6601 N01 AIRTECH 37804 K CONNECT MD 17804-K	VOLVO 20582209 3171694

1608185-CP

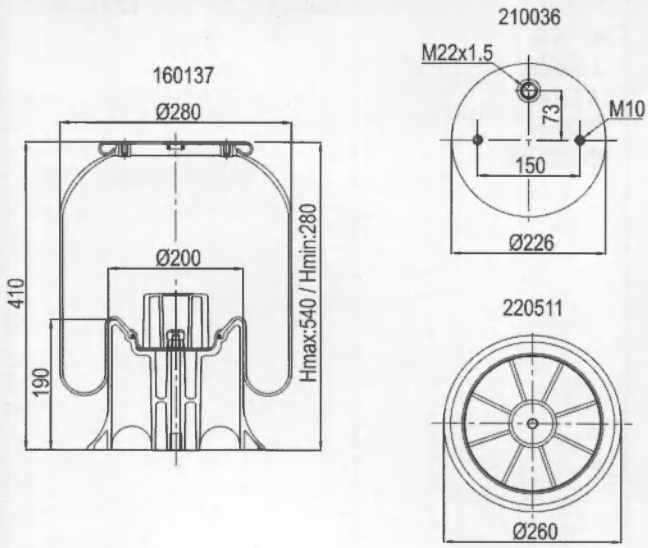

Order No 160137 weight(kg) 6,8 QIP(pcs) 25 Remarks	FIRESTONE 1 T 15 MPW 9 W01 M58 8185 AIRTECH 38185 K CONNECT MD 18185-KP	

1608683-CS

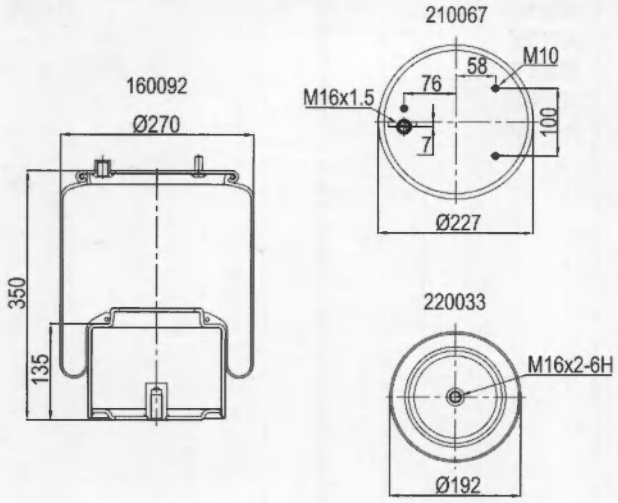

Order No	CONTITECH	DAF	039022
160092	887 MK1		
weight(kg)	FIRESTONE		
8	1 T 15 LNR 3		
QIP(pcs)	W01 M58 8683		
30	AIRTECH		
Remarks	38683 K		
	CONNECT		
	MD 18683-K		

1600209-CS

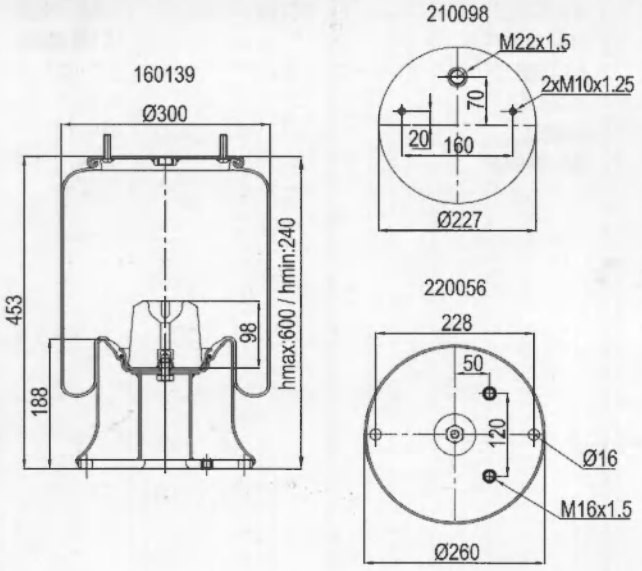

Order No	FIRESTONE	CARDI	58050900
160139	1 T 15 M 9	HENDRICKSON	B 6195
weight(kg)	W01 M58 6289	NEWAY	90557086
13,8	AIRTECH	OMAR	11808
QIP(pcs)	391209 K	ROLFO	112322
30	CF GOMMA	ZORZI	1006551
Remarks	1 T 323-40		
	CONNECT		
	MD 191209-K		

1600210-CS

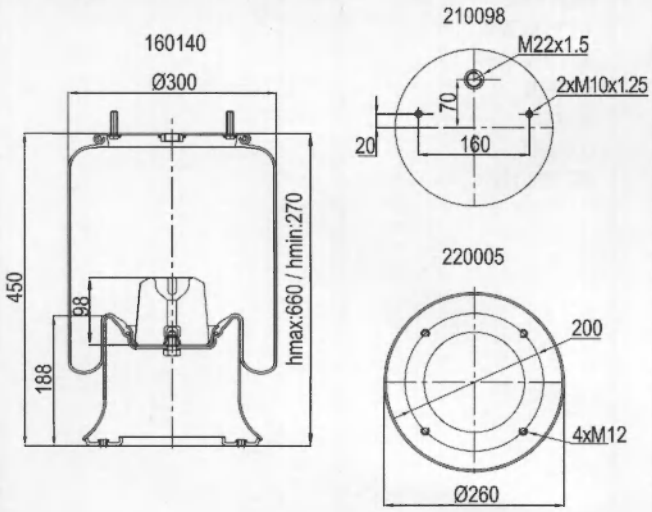

Order No	AIRTECH	VIBERTI	128147109
160140	391210 K		
weight(kg)	CF GOMMA		
9,5	1 T 323-40		
QIP(pcs)	CONNECT		
30	MD 191210-K		
Remarks			

1600305-CS

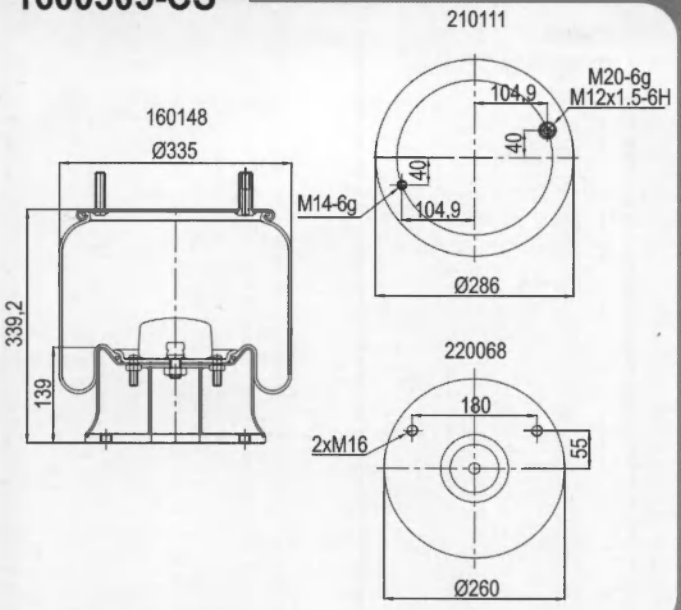

Order No	AIRTECH	KAISER	F 01004307
160148	391305 K		
weight(kg)	CONNECT		
14,9	MD 191305-K		
QIP(pcs)			
22			
Remarks			

1600318-CS

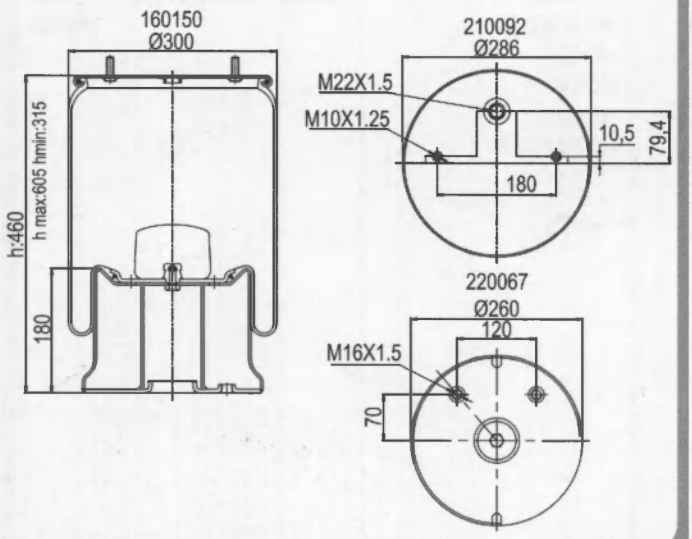

Order No	CONTITECH	BARTOLETTI	91619011
160150	811 MB	BATTAGLINO	2211401
weight(kg)	FIRESTONE	CARDI	58050700
15,3	1T 19 F11	DAF	67306
QIP(pcs)	W01 M58 6359	OMAR	11804
22	GOODYEAR	VIBERTI	128147102
Remarks	1R 14 - 706	ZORZI	1006553
	AIRTECH		
	391318 K		
	CF GOMMA		
	1T 19 E - 2		
	CONNECT		
	MD 191318-K		

1602144-CS

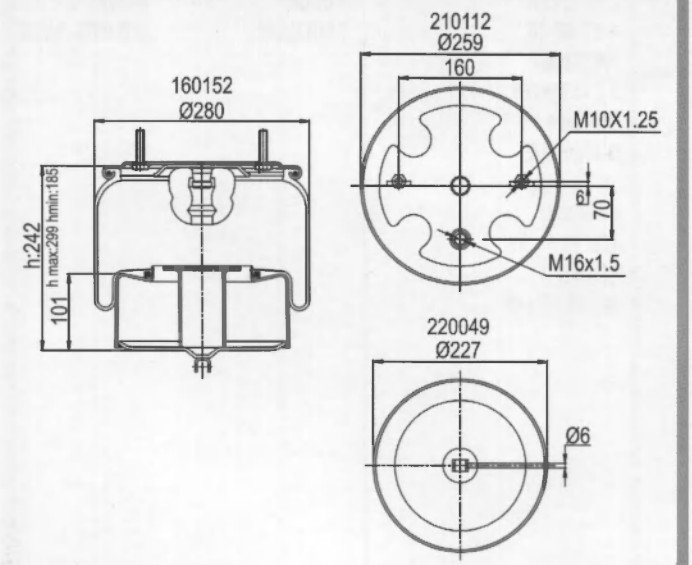

Order No	CONNECT	VOLVO	1629782
160152	MD 12144-K		
weight(kg)			
8,1			
QIP(pcs)			
30			
Remarks			

AIR EXPERT

1602621-CP

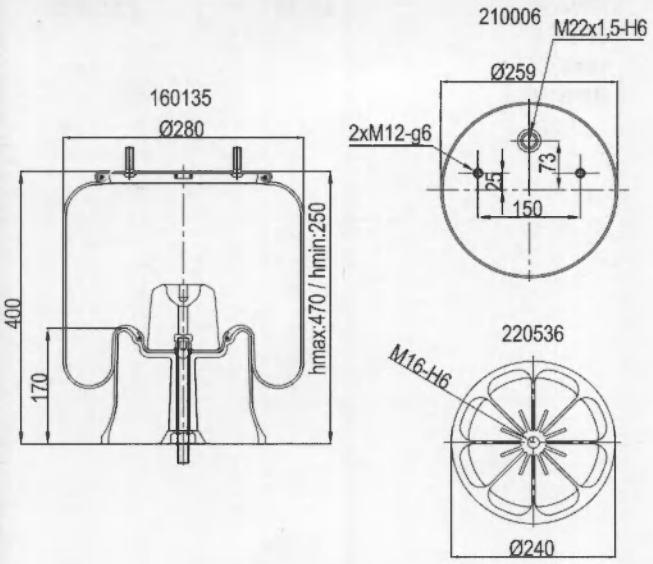

Order No 160135 weight(kg) QIP(pcs) Remarks	CONNECT MD 192621-KP	

1606251-CP

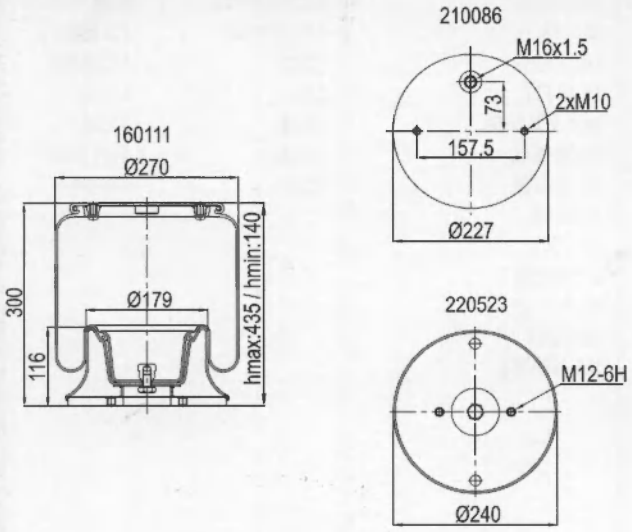

Order No 160111 weight(kg) 9 QIP(pcs) 30 Remarks	FIRESTONE 1 T 15 AA3 W01 M58 6251 AIRTECH 36251 K CONNECT MD 196251-KP	GRANNING 15619 SCANIA + SCANIA BUSSAR 1314903 1402423

1606315-CP

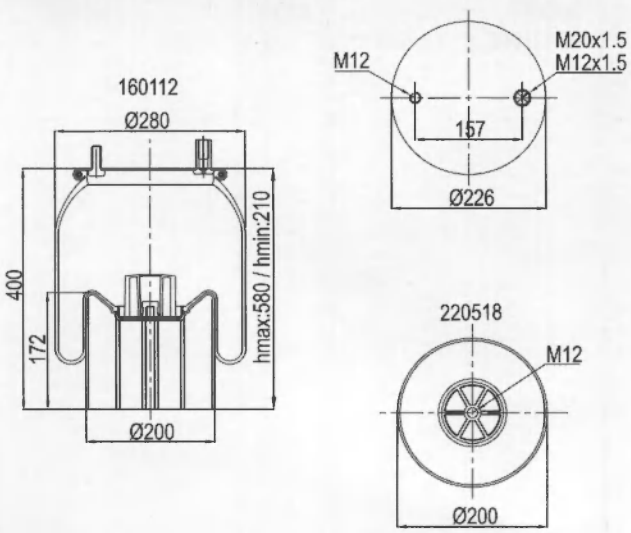

Order No 160112 924 weight(kg) QIP(pcs) Remarks	CONTITECH 4157 NP 10 FIRESTONE 1 T 15 MPW 9 W01 M58 6315 GOODYEAR 1R 11 - 772 PHOENIX 1DK 20 A - 51 CONNECT MD 196315-KP	ACERBI 441901 FRUEHAUF UJB 0975 / M060

1607502-CS

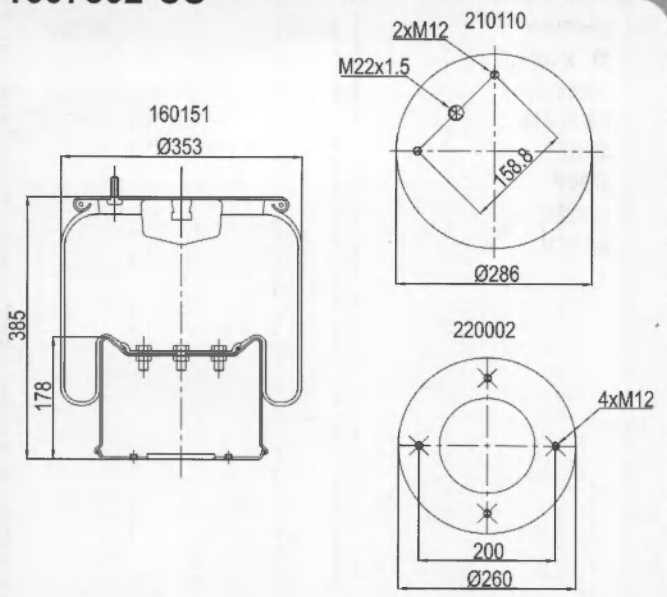

Order No
160151
weight(kg)
11,6
QIP(pcs)
22
Remarks

FIRESTONE
1 T 19 L11
W01 M58 7502
GOODYEAR
1R 14 - 709
PHOENIX
1D 28 B - 4
CONNECT
MD 197502-K

LECITRAILER SN 21502

1608608-CP

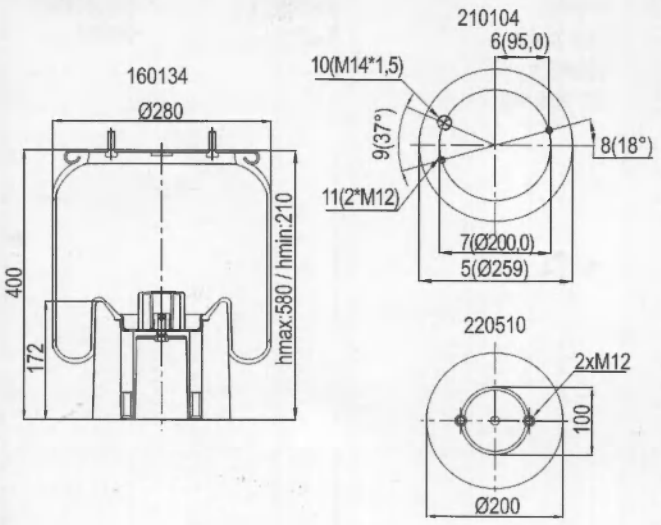

Order No
160134
weight(kg)
9
QIP(pcs)
30
Remarks

CONNECT
MD 198608-KP

1608643-CS

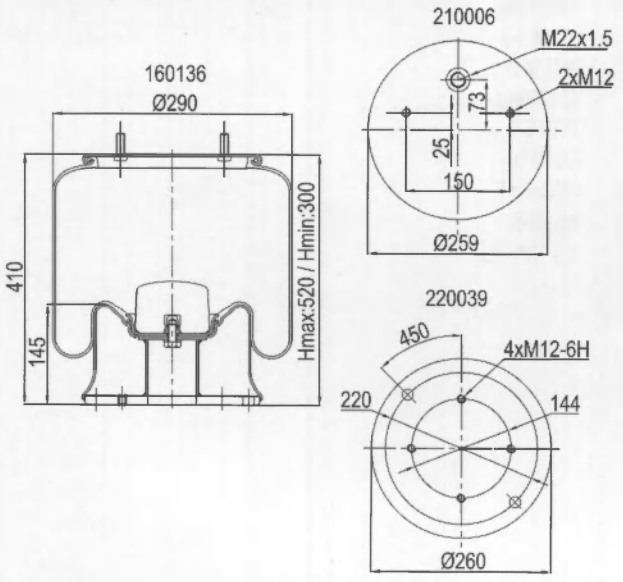

Order No
160136
weight(kg)
13
QIP(pcs)
25
Remarks

CONNECT
MD 198643-K

1600724

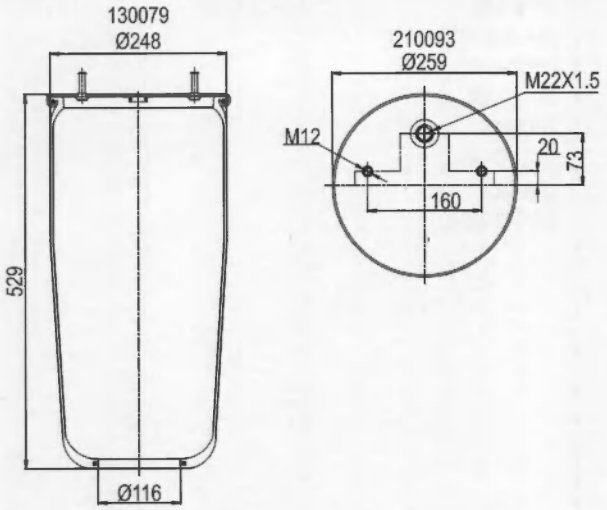

Order No	CONTITECH	GIGANT	246169
130079	724 N P01		
weight(kg)	GOORYEAR		
4.4	1 R 11-711		
QIP(pcs)	AIRTECH		
30	3724 P		
Remarks	CONNECT		
	MD 1724		

1600810-3CS

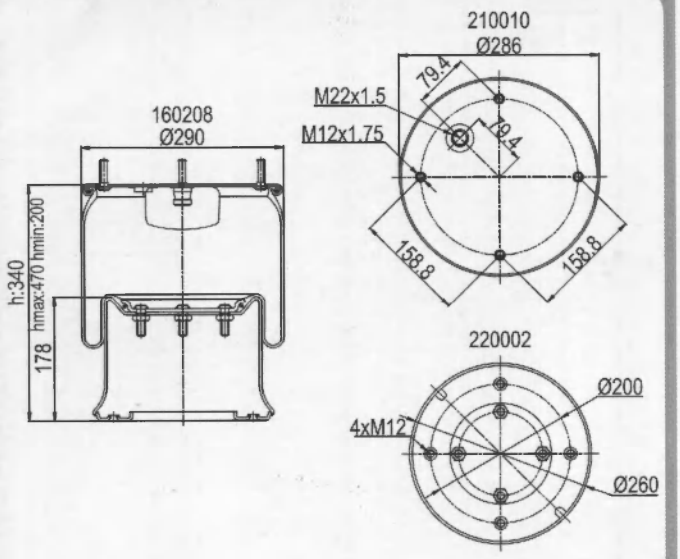

Order No	PHOENIX	RENAULT V.I	5010294309
160208	1 DK 28 A11	S.A.F.	2922V
weight(kg)	CONNECT		
10.5	MD 1810-K03		
QIP(pcs)			
22			
Remarks			

1600813-3CS

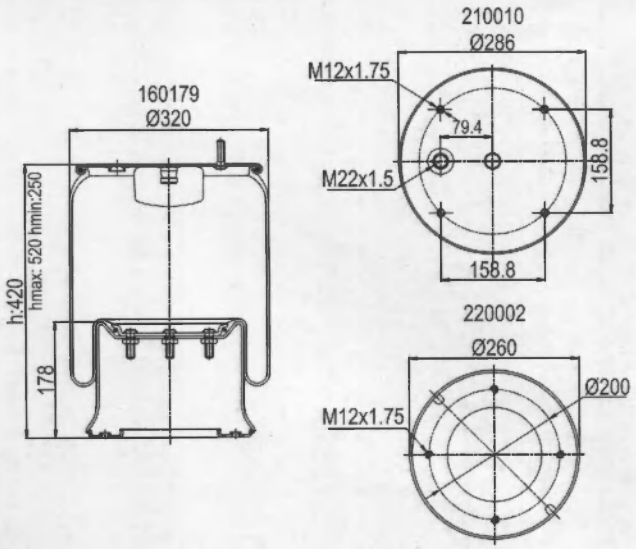

Order No	FIRESTONE		
160179	1T19F 11		
weight(kg)	W01 M58 6359		
11.88	CF GOMMA		
QIP(pcs)	1T19 E-2		
22	AIRTECH		
Remarks	3813 03 K		
	CONNECT		
	MD 1813-K03		

1606318-CP

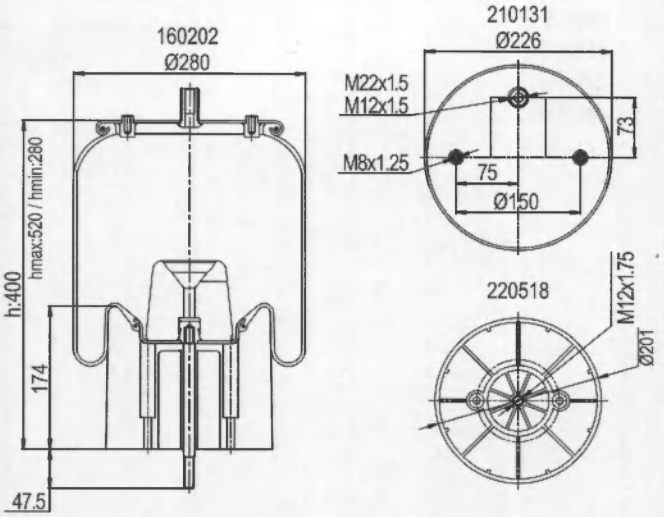

Order No	FIRESTONE	SCHMITZ	016 512
160202	1T15MPW 9	WEWELER	US 06318F
weight(kg)	W01 M58 6318		
7.1	AIRTECH		
QIP(pcs)	36318 K		
22	CONNECT		
Remarks	MD 196318-KP		

1607308-CP

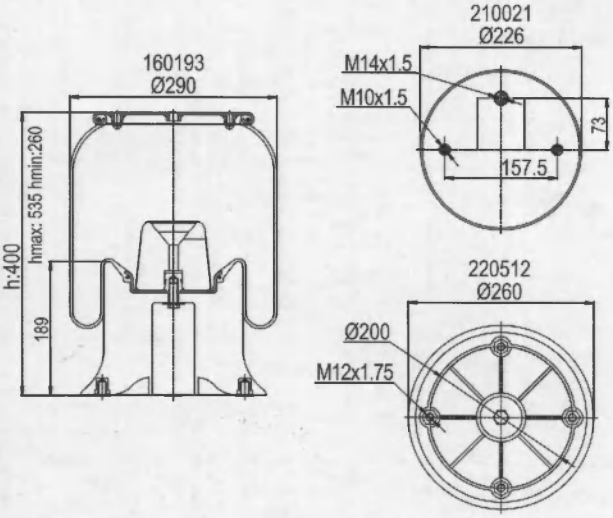

Order No	FIRESTONE	SCANAIA	1314905
160193	W01 M58 7308		
weight(kg)	GOODYEAR		
7.52	1R12-713		
QIP(pcs)	CONNECT		
30	MD 197308-KP		
Remarks			

1600081-CP

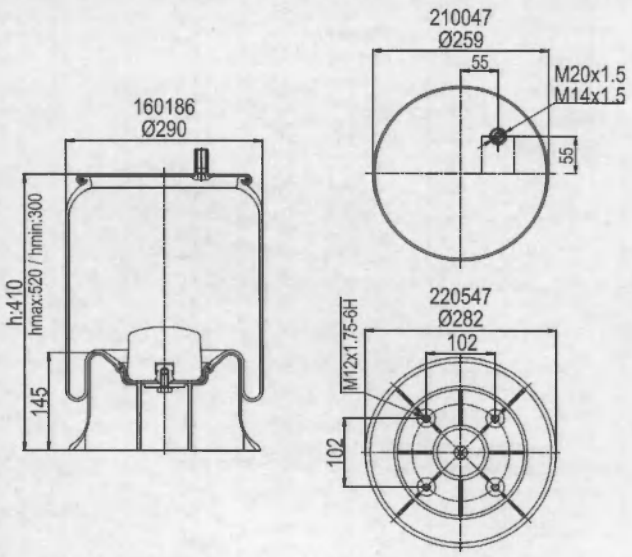

Order No	FIRESTONE	HENDRICKSON	HS 251087
160186	1 T 17 B 11	MERCEDES	A 946 328 04 01 DISCOS
weight(kg)	W01 M58 8747	SAMRO	2500915
12	GOODYEAR		
QIP(pcs)	1 R 13-150		
25	AIRTECH		
Remarks	30081 K		
	CONNECT		
	MD 10081-KP		

1604154

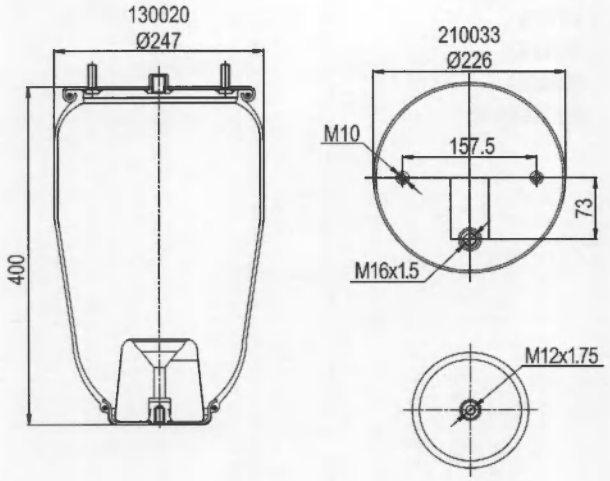

Order No	CONTITECH	RENAULT V.I	5.010.239.252
160020	4154 NP 01		5.010.294.252.B
weight(kg)	AIRTECH		
3.84	34154-01		
QIP(pcs)	CONNECT		
30	MD 14154		
Remarks			

1604154-CP

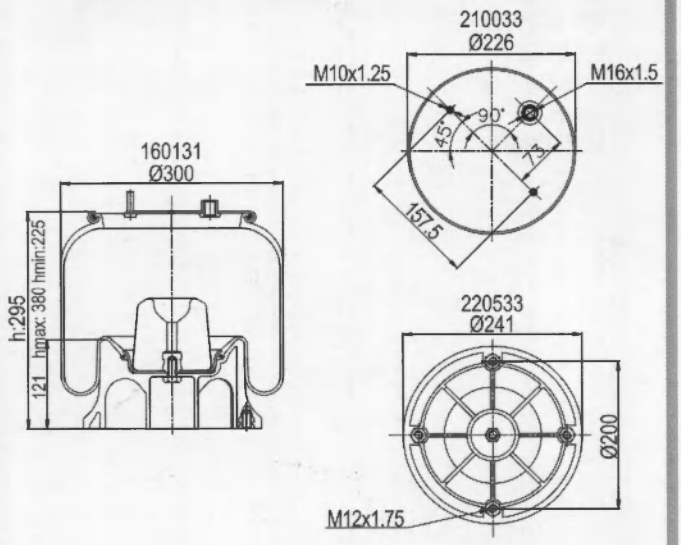

Order No	AIRTECH		
160131	34154 KPP		
weight(kg)	CONNECT		
6.9	MD 14154-KP		
QIP(pcs)			
25			
Remarks			

1604154-5CP

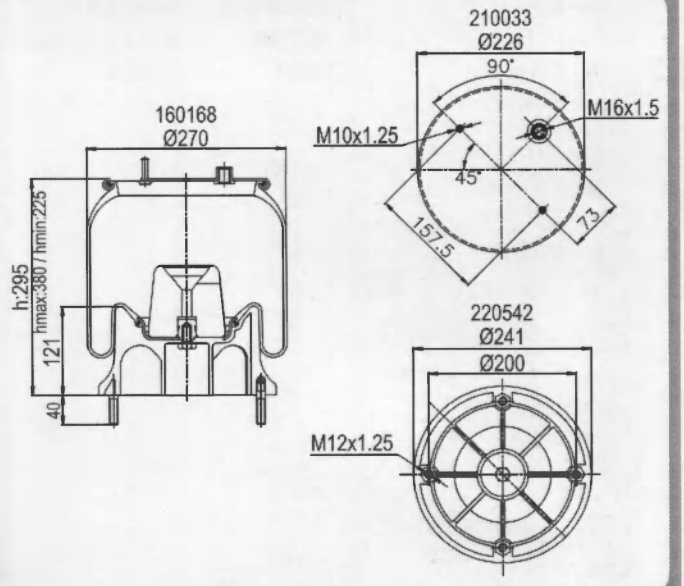

Order No	CONTITECH		
160168	4154 N P05		
weight(kg)	PHOENIX		
6.9	1 DK 23 F-1		
QIP(pcs)	CONNECT		
25	MD 14154-KP05		
Remarks			

1604159-14

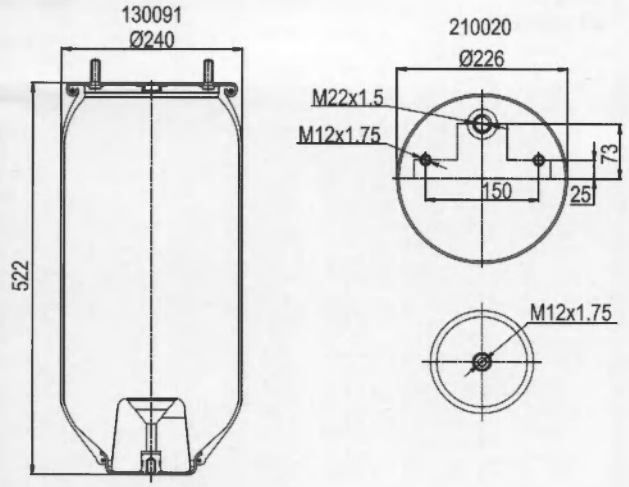

Order No
130091
weight(kg)
5.5
QIP(pcs)
30
Remarks

FIRESTONE
1T 15 MPW 9
W01 M58 6287

1604159-16CP

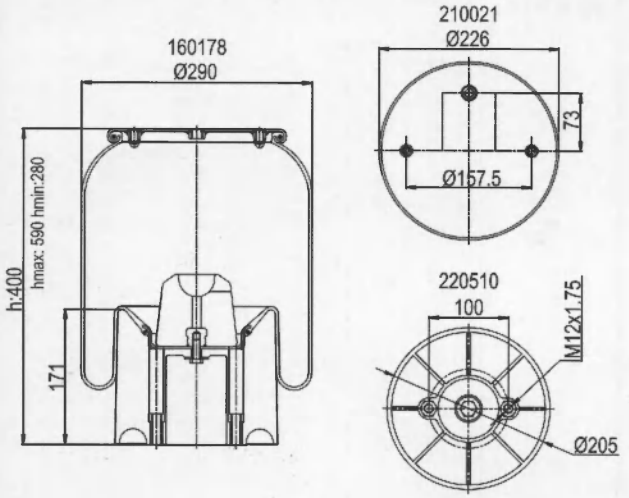

Order No
160178
weight(kg)
7.5
QIP(pcs)
25
Remarks

GOODYEAR
1 R 12-713
CONNECT
MD 14159-KP16

1604183-2CS

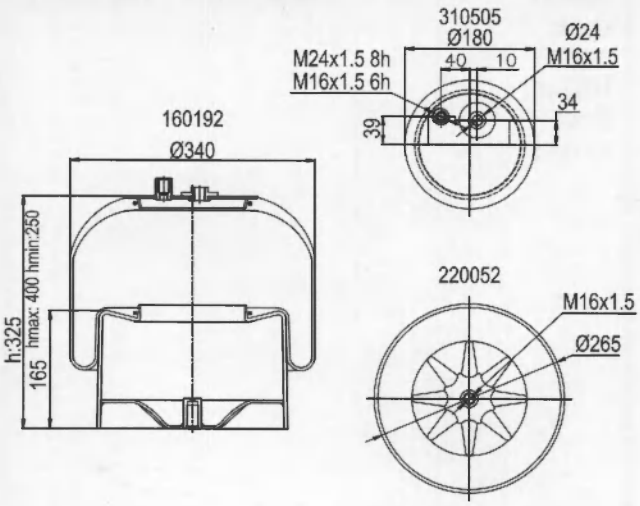

Order No
160192
weight(kg)
11.5
QIP(pcs)
25
Remarks

CONTITECH
4183 NP 24
CONNECT
MD 14183-K02

1604391-2CS

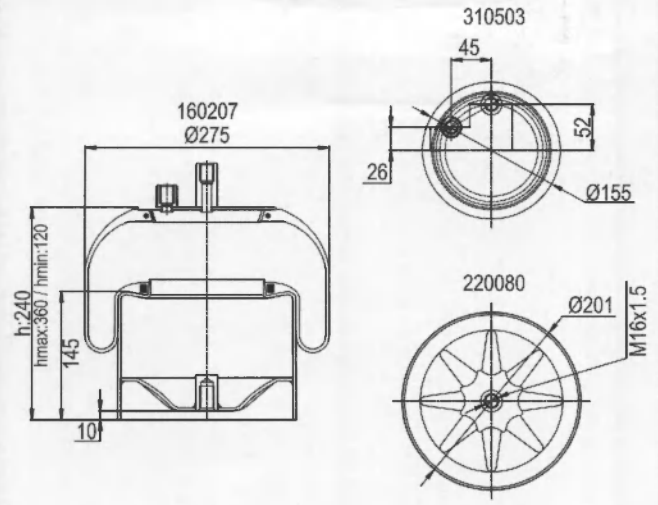

Order No 160207 weight(kg) 6.4 QIP(pcs) 30 Remarks	CONTITECH 4391 N P02 CONNECT MD 14391-K02	

1604543-CS

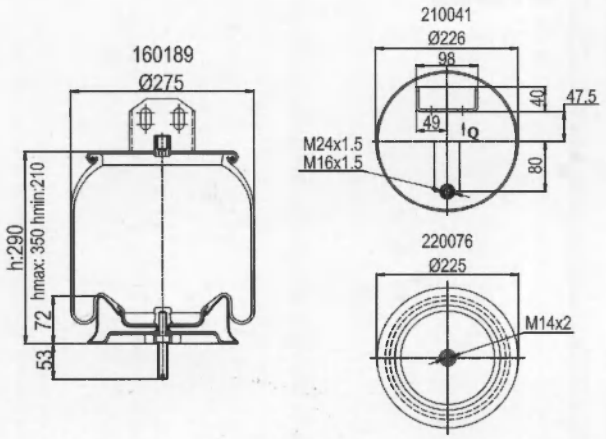

Order No 160189 weight(kg) 9.8 QIP(pcs) 25 Remarks	CONNECT MD 14543-K	VOLVO	20424543

1604737

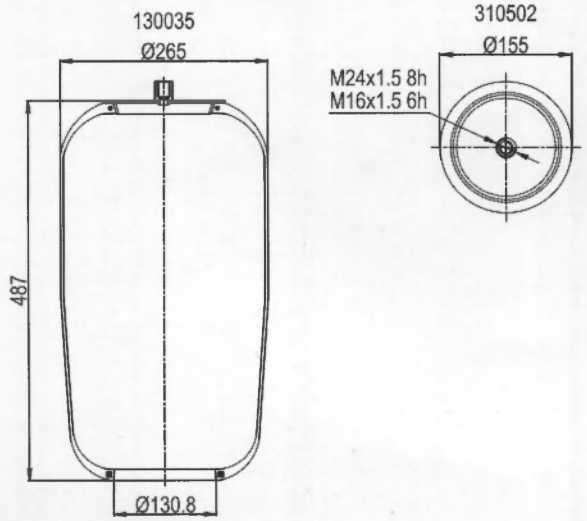

Order No 130035 weight(kg) 6.1 QIP(pcs) 30 Remarks	CONTITECH 4737 N AIRTECH 34737-01 P CONNECT MD 14737	DAIMLER C	A 946 320 03 21

1604737-1CS

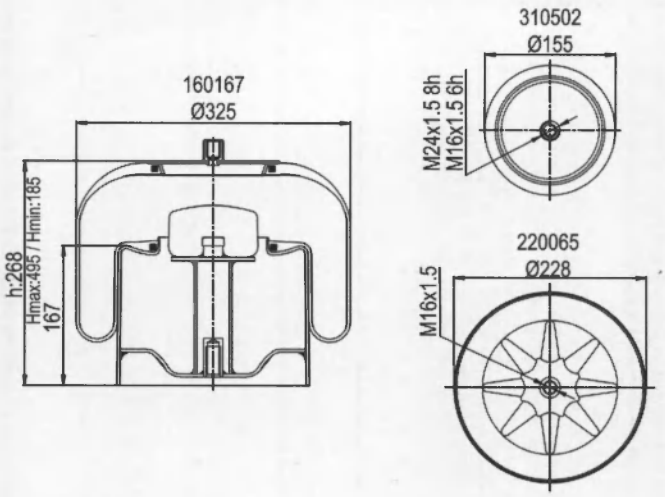

Order No
160167
weight(kg)
8.4
QIP(pcs)

Remarks

CONTITECH
4737 N P21
AIRTECH
34737-01K
CONNECT
MD 14737-K01

DAIMLER C A 946 320 05 21

1604759-CS

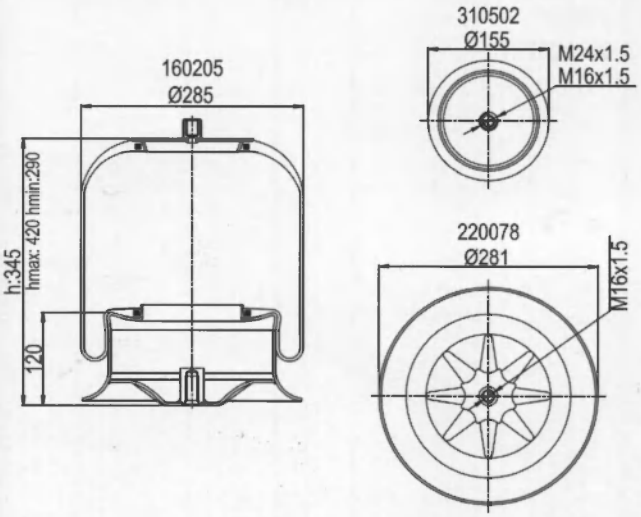

Order No
160205
weight(kg)
6.6
QIP(pcs)
25
Remarks

CONTITECH
4759 N P01
AIRTECH
34759 K
CONNECT
MD 14759-K

1604810-11CS

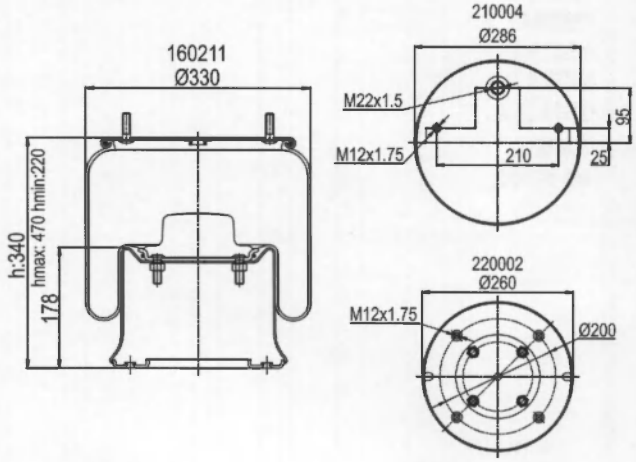

Order No
160211
weight(kg)
11
QIP(pcs)
22
Remarks

CONNECT
MD 14810-K11

1604912-01

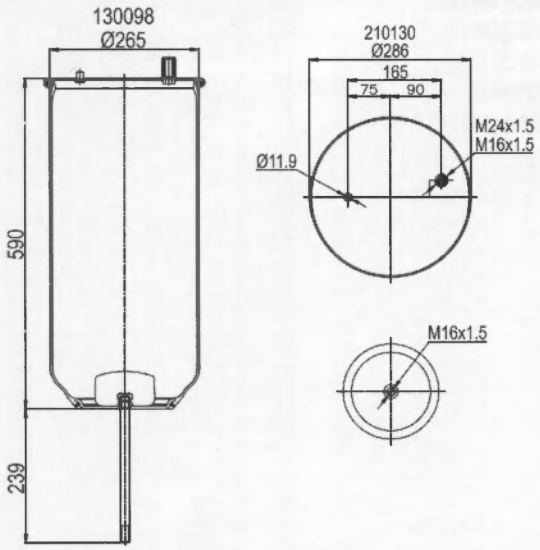

Order No
130098
weight(kg)
6.8
QIP(pcs)
22
Remarks

CONNECT
MD 14912-01

1604912-1CS

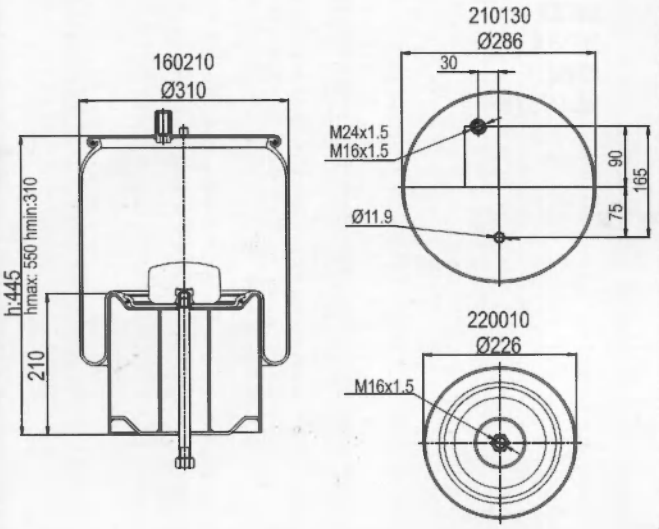

Order No
160210
weight(kg)
13.7
QIP(pcs)
20
Remarks

CONTITECH
4912 NP 10
CONNECT
MD 14912-K01

RENAULT V.I 5010557355

1604915-CS

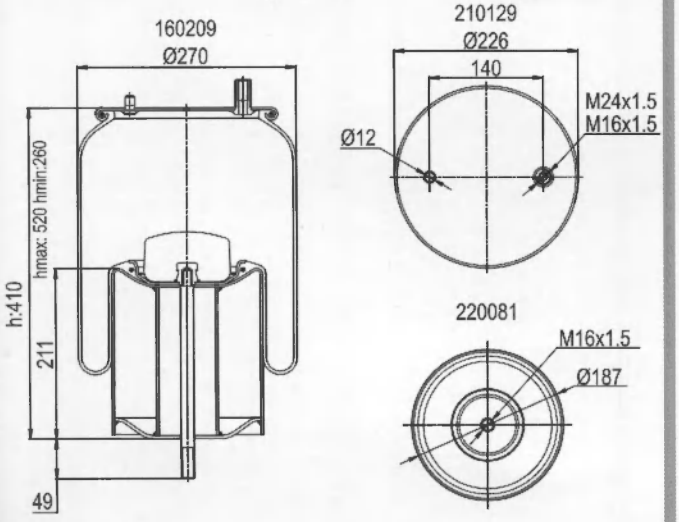

Order No
160209
weight(kg)
10.44
QIP(pcs)
30
Remarks

CONTITECH
4915 NP 06
PHOENIX
1 DK 19-1
AIRTECH
34915 01 K
CONNECT
MD 14915-K

1604915-CP

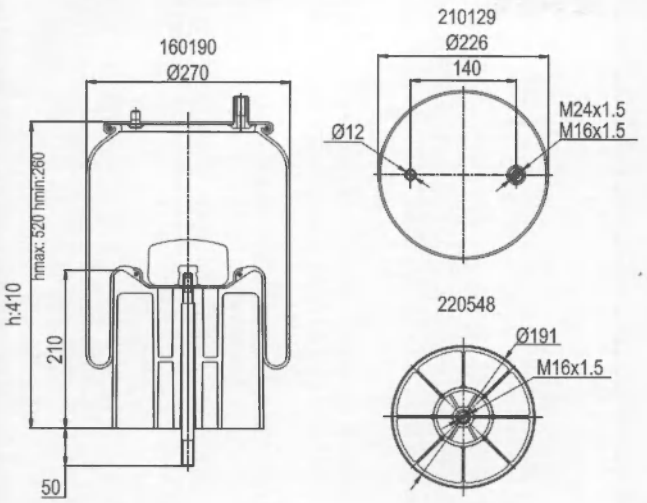

Order No
160190
weight(kg)
9.5
QIP(pcs)
30
Remarks

CONTITECH
4915 NP 06
PHOENIX
1 DK 19-1
AIRTECH
34915 01 K
CONNECT
MD 14915-KP

RENAULT V.I 5010294309

1604941-CP

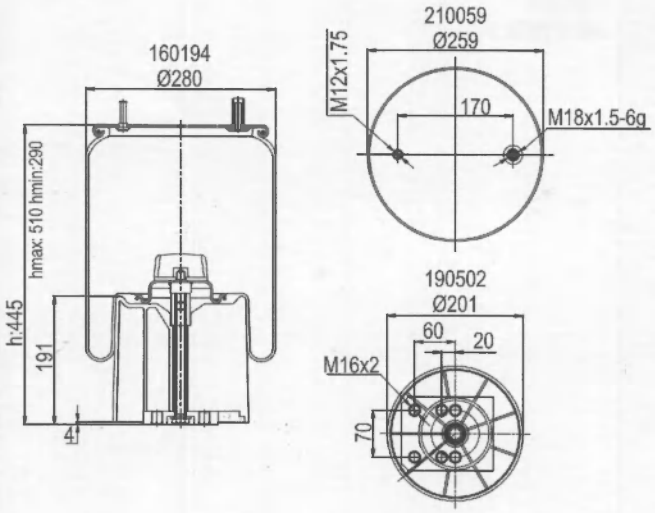

Order No
160194
weight(kg)
9.4
QIP(pcs)
30
Remarks

AIRTECH
34941 K
CONNECT
MD 14941-KP

1606420-CS

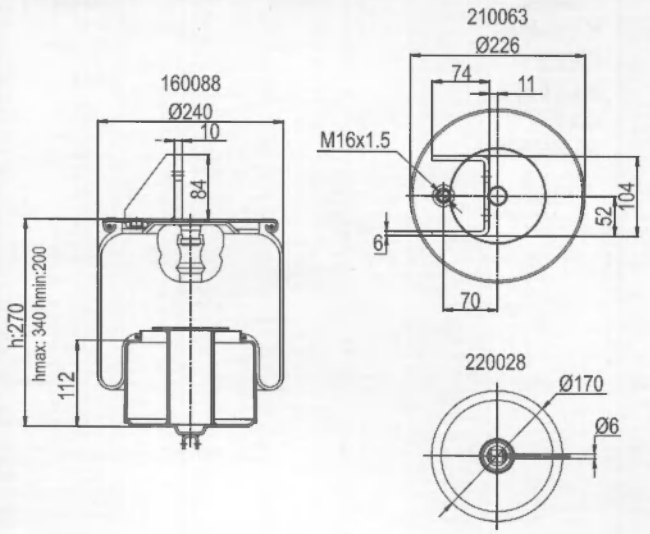

Order No
160088
weight(kg)
6.95
QIP(pcs)
30
Remarks

CONNECT
MD 16420-K

VOLVO 1076420

1606420-1CS

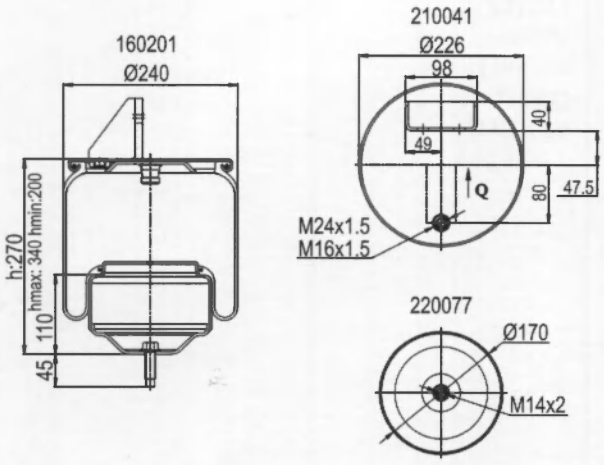

Order No
160201
weight(kg)
6.95
QIP(pcs)
30
Remarks

CONNECT
MD 16420-K01

VOLVO 1076420

1609285-CS

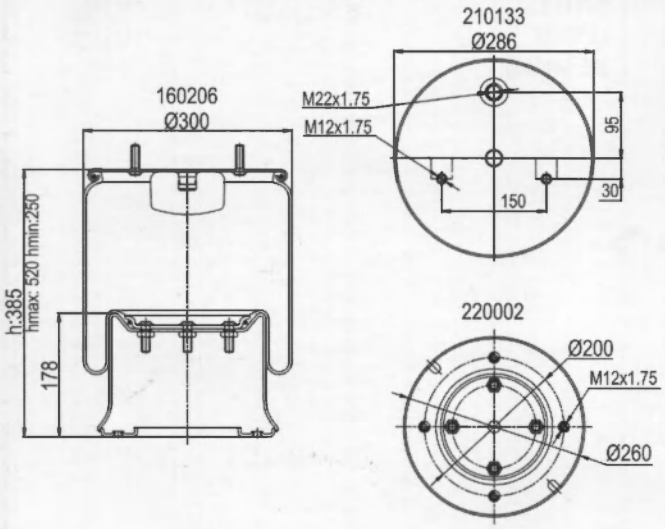

Order No
160206
weight(kg)
15,1
QIP(pcs)
22
Remarks

PHOENIX
1 D 28 F-5
CONNECT
MD 19285-K

1600210-1CS

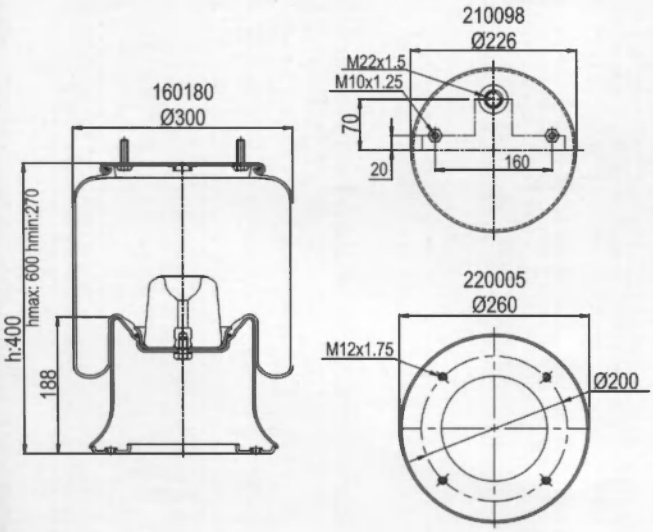

Order No
160180
weight(kg)
9.5
QIP(pcs)
25
Remarks

CF GOMMA
1T 323-40 BG
AIRTECH
391210 01 K
CONNECT
MD 191210-K01

VIBERTI 128147111

1600318-1CS

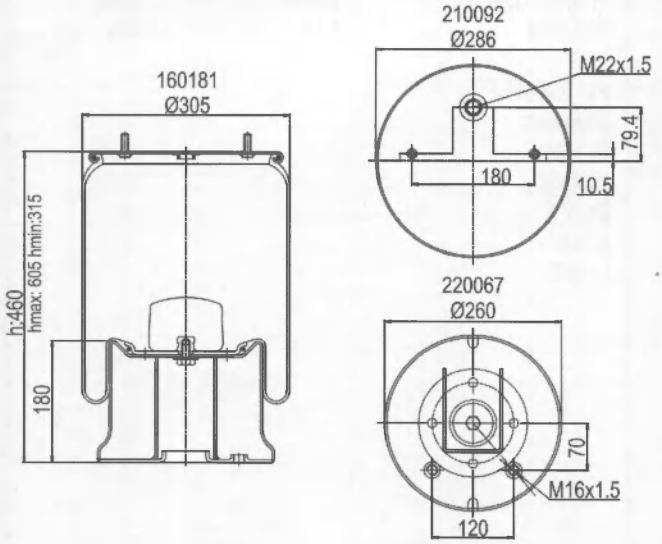

Order No	AIRTECH	
160181	391318-K01	
weight(kg)	CONNECT	
12.65	MD 191318-K01	
QIP(pcs)		
22		
Remarks		

1600319-CS

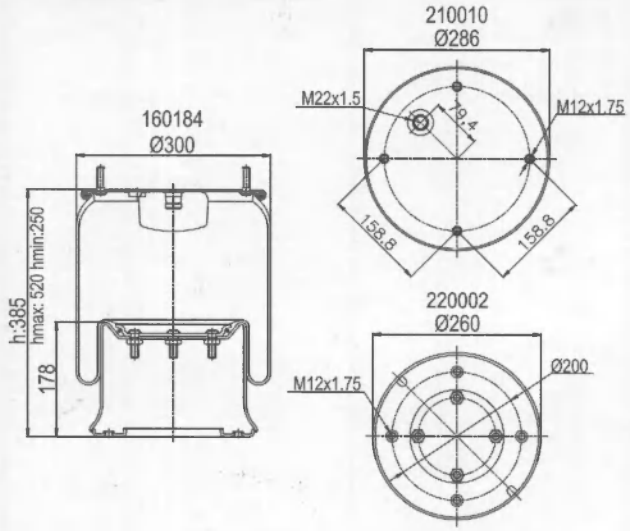

Order No	FIRESTONE	BARTOLETTI	91619005
160184	1 T 19 L-11	BATTAGLINO	2211400
weight(kg)	W01 M58 6364	CARDI	58051000
9.5	CF GOMMA		
QIP(pcs)	1T 19 E-2		
30	AIRTECH		
Remarks	391319-K		
	CONNECT		
	MD 191319-K		

1600320-CS

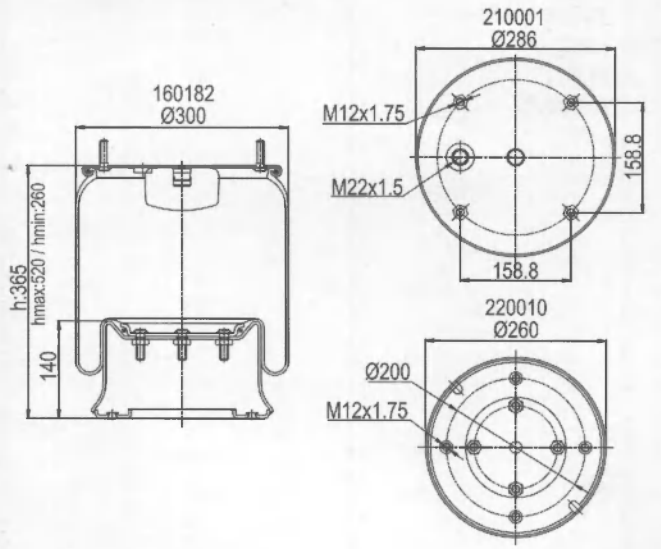

Order No	FIRESTONE	DAF	1 384 273
160182	1 T 19L 7	GRANNING	15635
weight(kg)	W01 M58 6345	HENDRICKSON	506243
11,98	PHOENIX	RENAULT V.I	5000452939
QIP(pcs)	1 D 28 A-2	R.O.R. MERITOR	21208082
22	GOODYEAR	S.A.F	2.228.0002.00
Remarks	1R14-716	YORK	506243/01
	CF GOMMA		
	1T 19E-1		
	AIRTECH		
	391320 K		
	CONNECT		
	MD 191320-K		

D 220

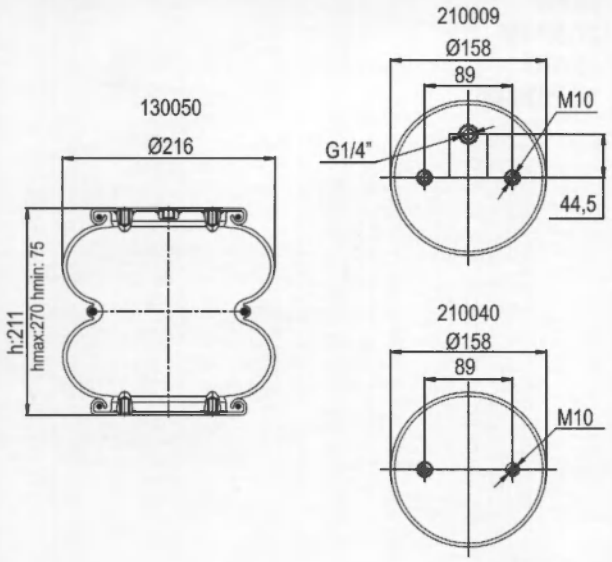

Order No	CONTITECH	FRUEHAUF	1371
130050	FD 200-19 1/4	GIGANT	S8768
weight(kg)	FIRESTONE	T.E.C	0001
7	20 CT		
QIP(pcs)	W01 358 6910		
30	GOODYEAR		
Remarks	2B 9-223		
	PHOENIX		
	2B 12 R		
	Airkraft		
	113001		

D 220-01

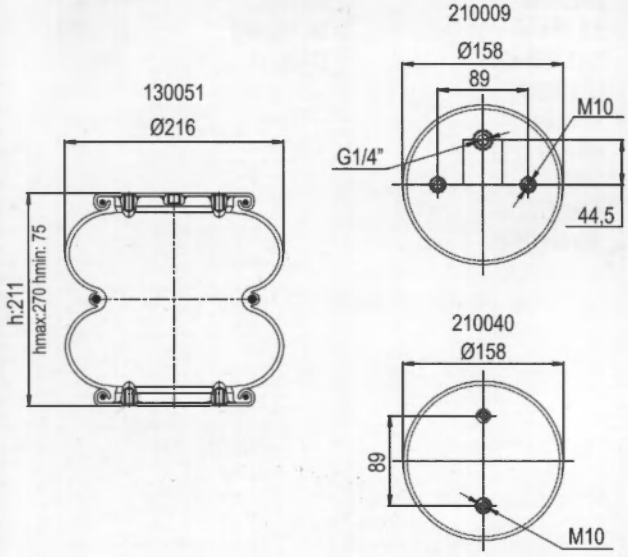

Order No	AIRKRAFT	PETERB•LT	45.98.00.5419.2
130051	113003		
weight(kg)			
10,8			
QIP(pcs)			
25			
Remarks			

D 220-03

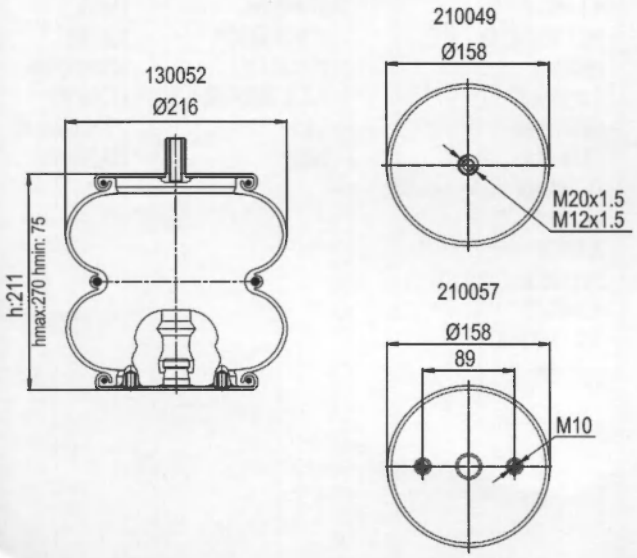

Order No	PHOENIX		
130052	2B 12 R		
weight(kg)	AIRKRAFT		
8,6	113015		
QIP(pcs)	GOODYEAR		
22			
Remarks			

D 220-04

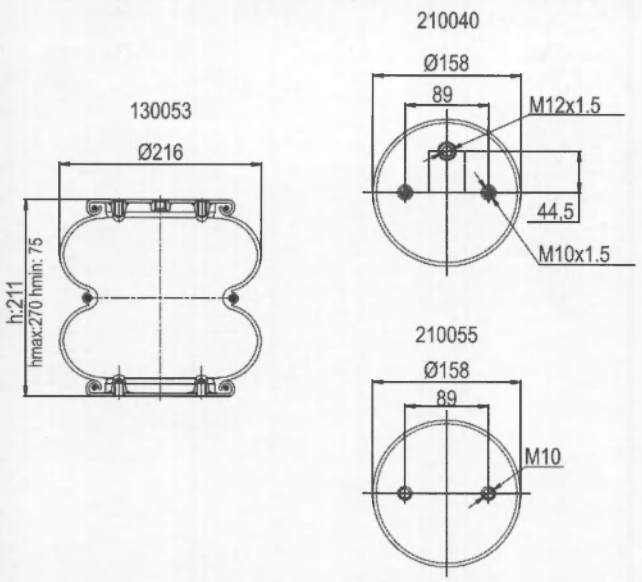

Order No
130053
weight(kg)
9
QIP(pcs)
22
Remarks

D 220-05

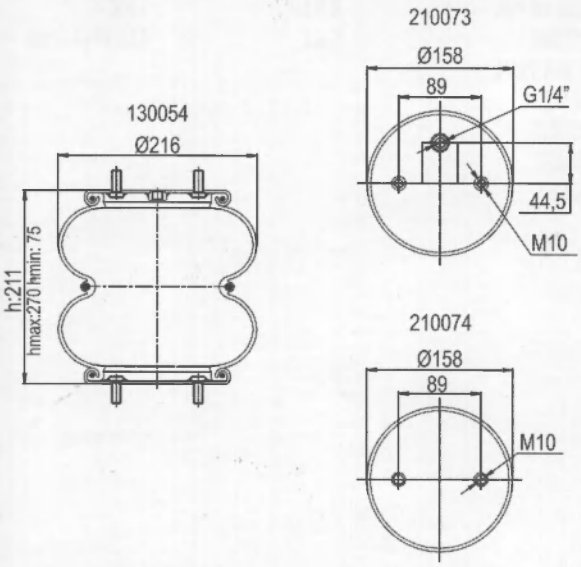

Order No
130054
weight(kg)
11,2
QIP(pcs)
22
Remarks

D 220-06

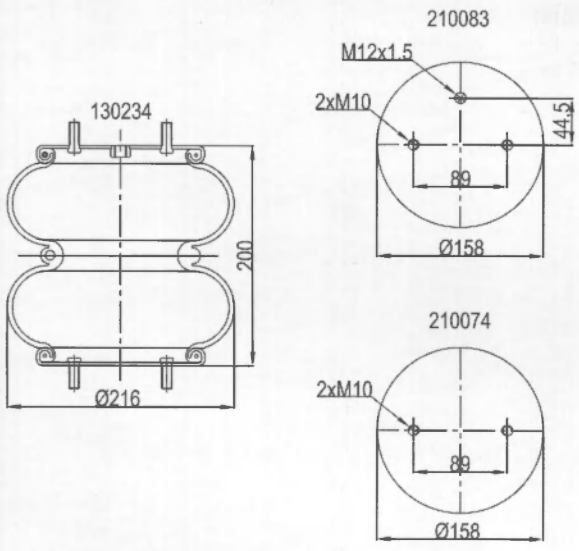

Order No
130234
weight(kg)
11,8
QIP(pcs)
22
Remarks

D 220-07

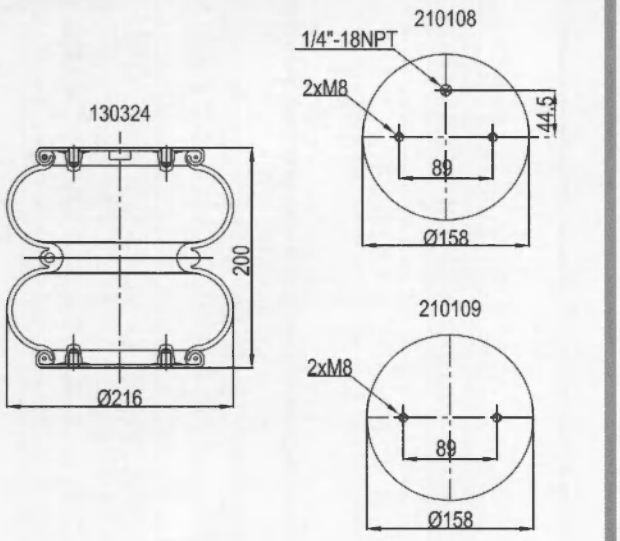

Order No		
130324		
weight(kg)		
6,6		
QIP(pcs)		
20		
Remarks		

D 220-08

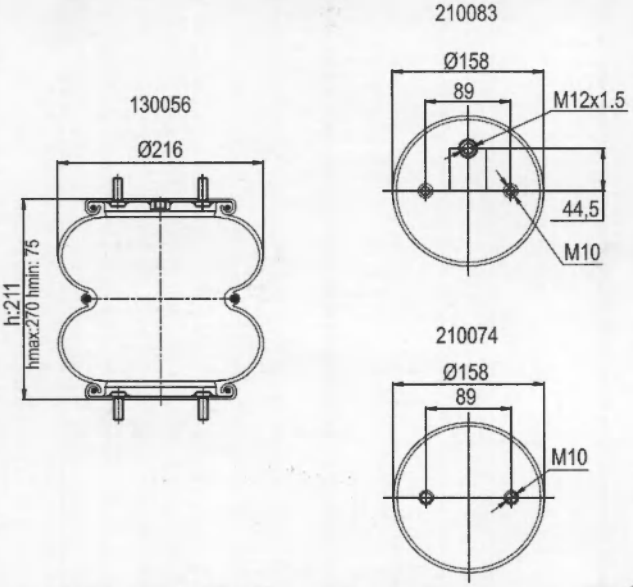

Order No	CONTITECH	HENDRICKSON	A 06030604
130056	FD 200-19 P04	R.V.I	1600 4.
229.1004.00	FIRESTONE	S.A.E	131 9761 -138
weight(kg)	W01 358 7894		
7289	PHOENIX		
9,4	2B 12 R-3		
QIP(pcs)	AIRKRAFT		
20	113002		
Remarks			

D 220-09

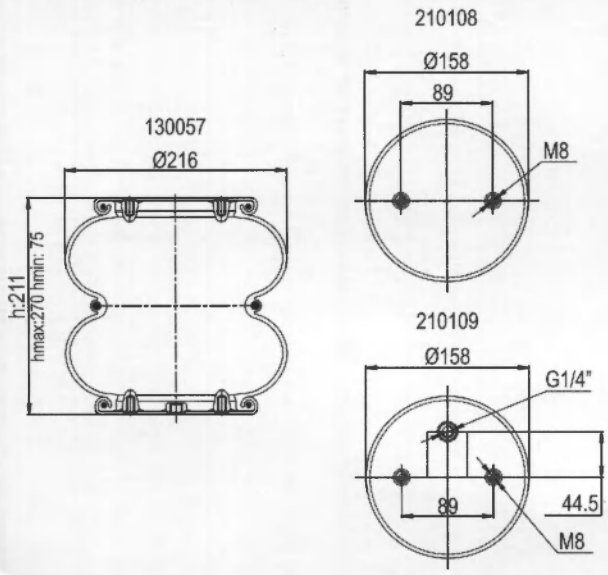

Order No	AIRKRAFT	S.A.E	1387283
130057	113018		
weight(kg)			
7			
QIP(pcs)			
30			
Remarks			

D 220-10

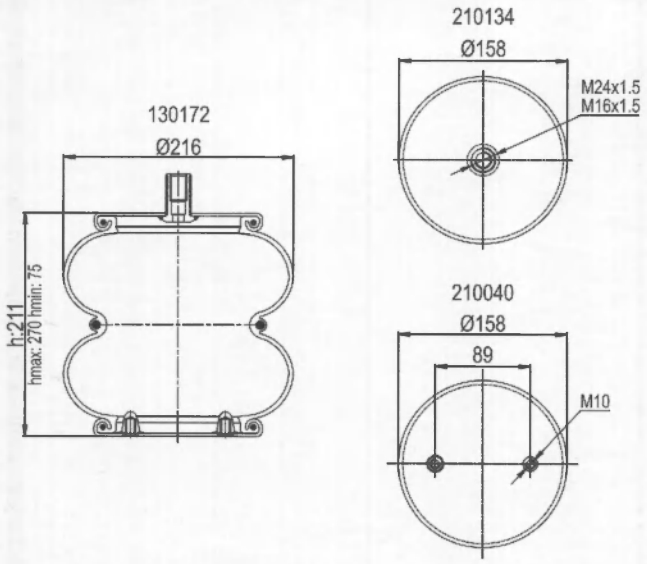

Order No
130172

D 300

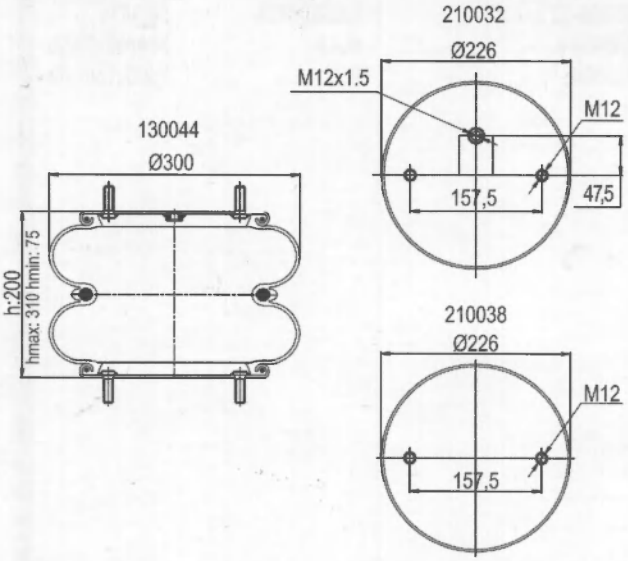

Order No
130044
weight(kg)
6,5
QIP(pcs)
30
Remarks

D 300-01

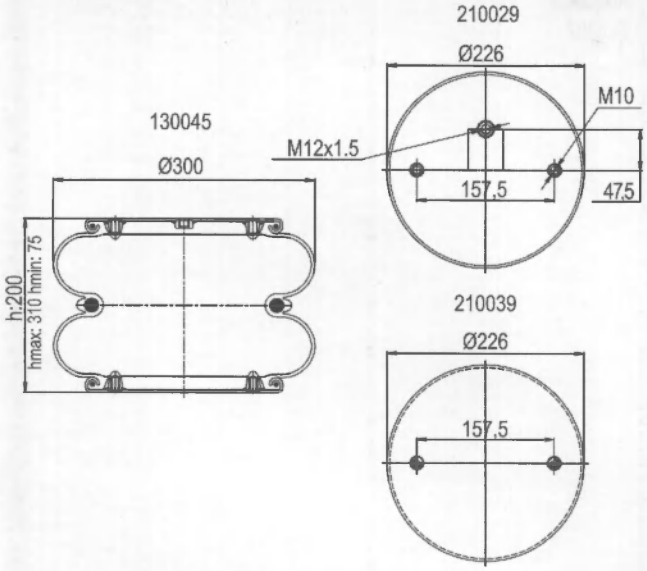

Order No
130045
weight(kg)
6,8
QIP(pcs)
30
Remarks

AIR EXPERT

D 300-02

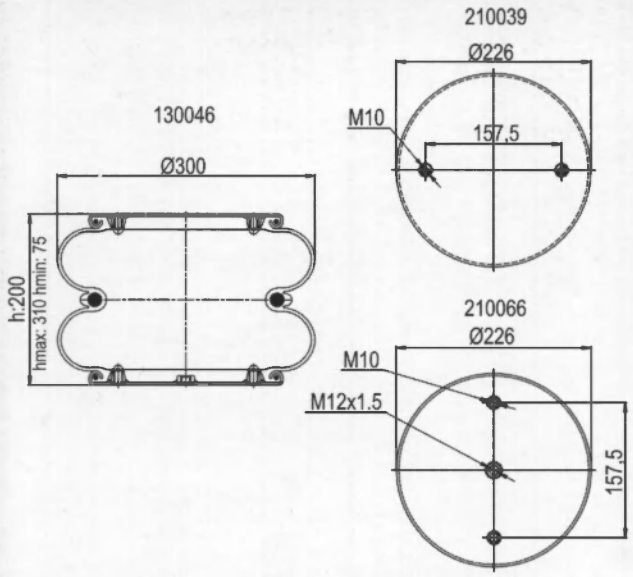

Order No		
130046		
weight(kg)		
6,5		
QIP(pcs)		
30		
Remarks		

D 300-03

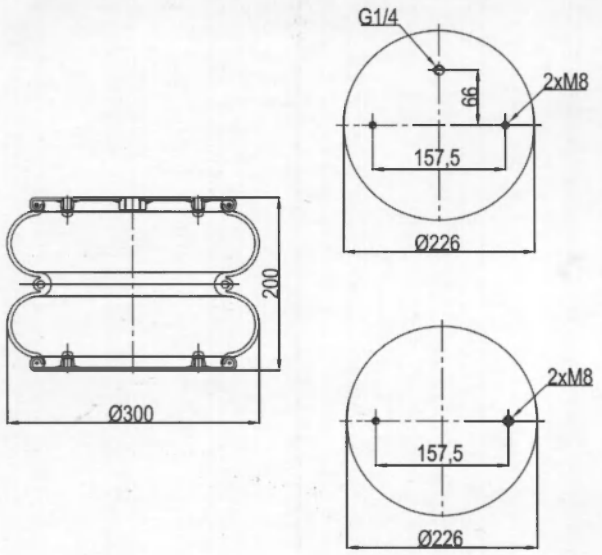

Order No	CONTITECH	DAYTON	02.2002.19.00
	FD 330-22 1/1 M8	KASSBOHRER	NA 1816
weight(kg)	AIRKRAFT	M.A.N	81436010022
7	113306	R.V.I	2.229.1001.00
QIP(pcs)			
30			
Remarks			

D 300-04

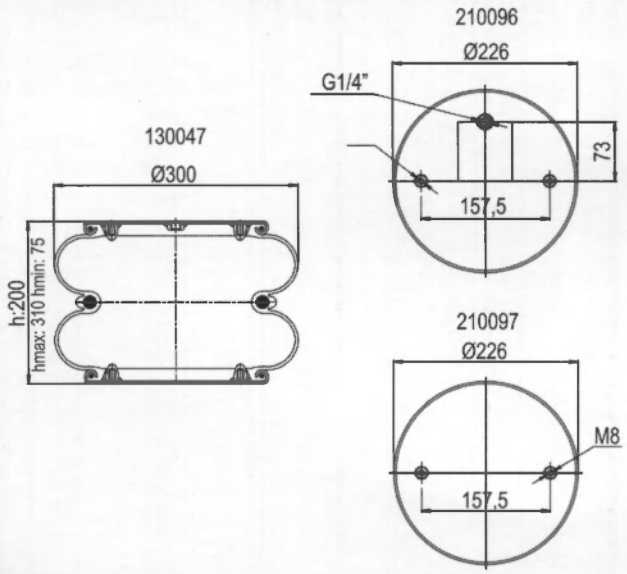

Order No	AIRKRAFT
130047	113307
weight(kg)	
7	
QIP(pcs)	
30	
Remarks	

D 300-05

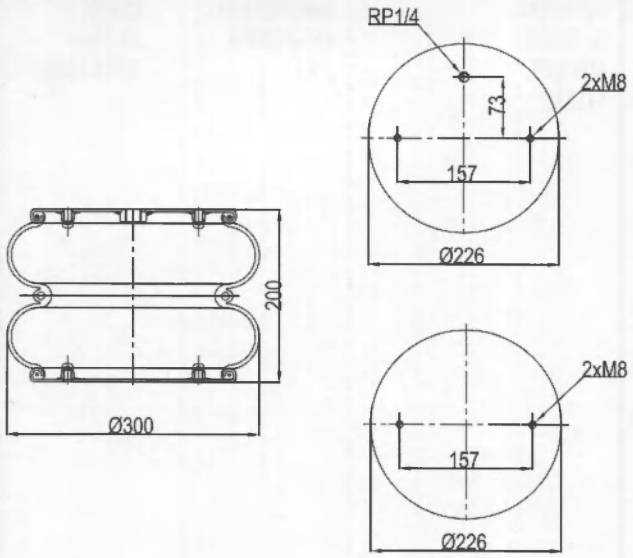

Order No 130995 weight(kg) 7 QIP(pcs) 30 Remarks	CONTITECH FD 330-23 FIRESTONE W01 358 6381 GOODYEAR 2B 12-425 PHOENIX 2B 22R Airkraft 113308	HENDRICKSON KASSBOHRER	15646 NA 1816

D 300-06

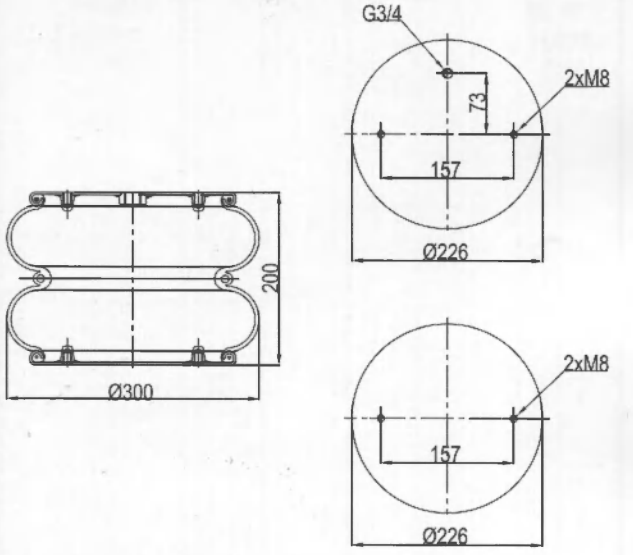

Order No 130994 weight(kg) 7 QIP(pcs) 30 Remarks	FIRESTONE W01 M58 6200 AIRKRAFT 113309		

D 300-07

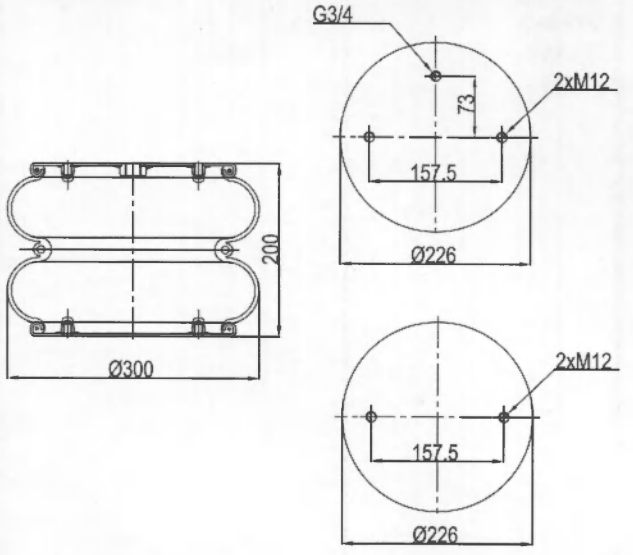

Order No 130993 weight(kg) 7 QIP(pcs) 30 Remarks	AIRKRAFT 113310		

D 300-08

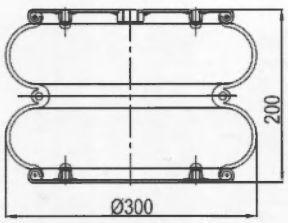

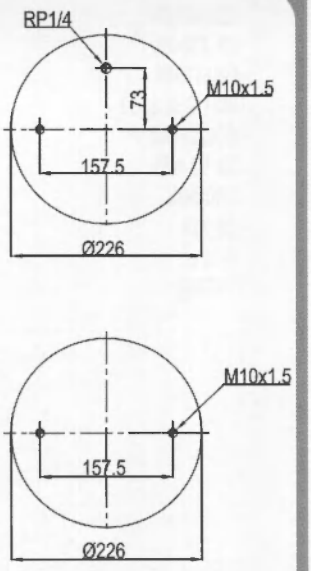

Order No	GOODYEAR	HENDRICKSON	15646
130992	SP 2B 22R	KASSBOHRER	NA 1816
weight(kg)	AIRKRAFT	R.V.I	3.229.1001.00
7	113312		
QIP(pcs)			
30			
Remarks			

D 300-09

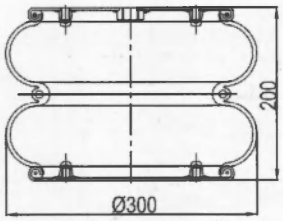

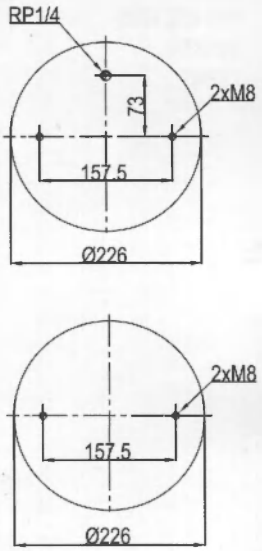

Order No	GOODYEAR		
130991	SP 2B 22R		
weight(kg)	AIRKRAFT		
7	113313		
QIP(pcs)			
30			
Remarks			

D 300-10

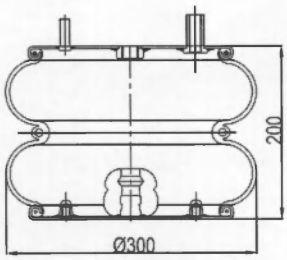

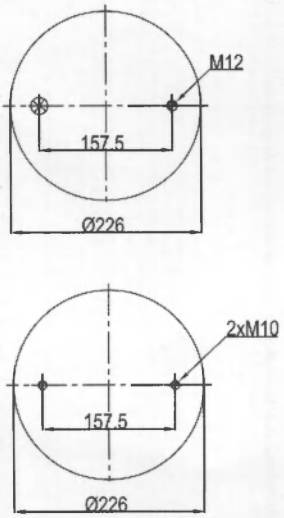

Order No	GOODYEAR		
130990	SP12 Ra-2		
weight(kg)	AIRKRAFT		
7	113320		
QIP(pcs)			
30			
Remarks			

AIR EXPERT

D 370

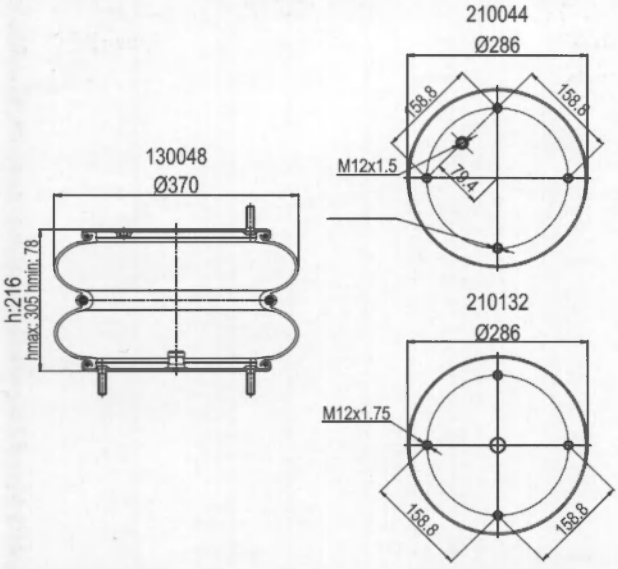

D 370-01

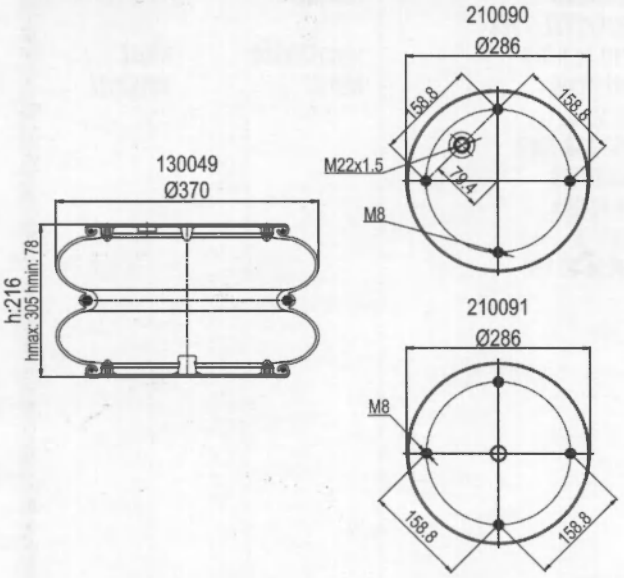

T 300

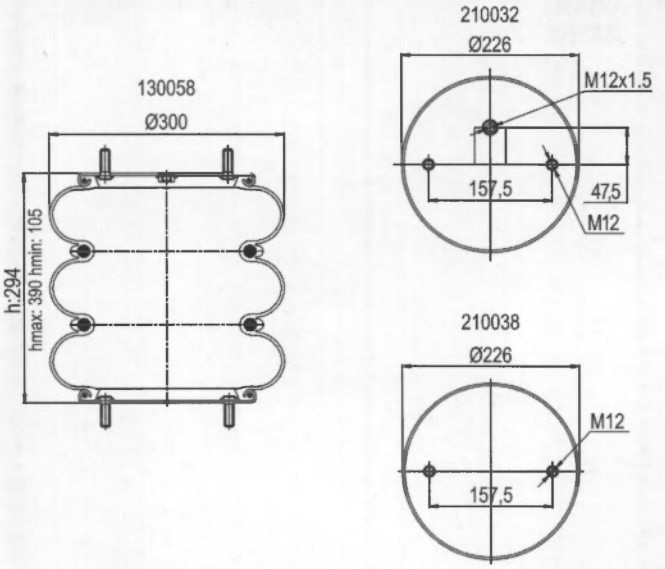

Order No
130058
weight(kg)
9,5
QIP(pcs)
30
Remarks

AIR EXPERT

199082-CS

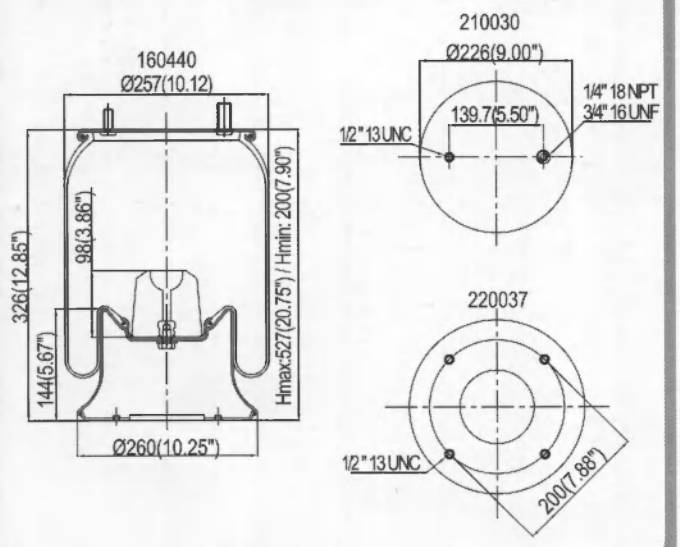

Order No
160440
weight(kg)
10
QIP(pcs)
30
Remarks

199082-CP

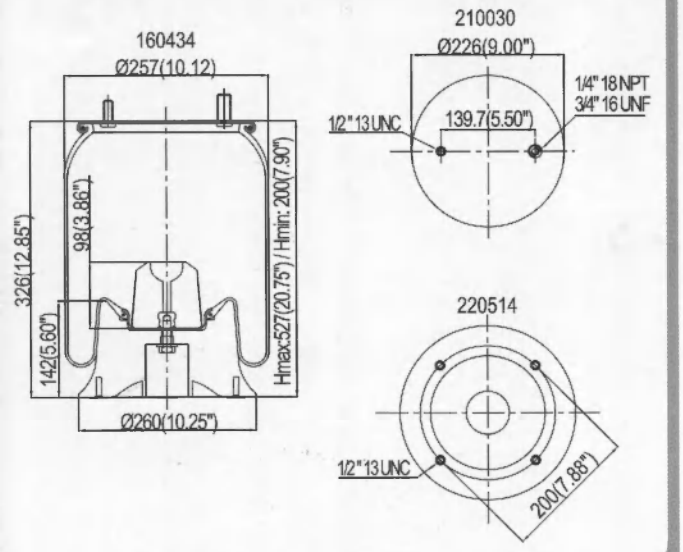

Order No
160434
weight(kg)
6,5
QIP(pcs)
30
Remarks

CONTITECH
1359/2727/1528
9 10-16 P 310
FIRESTONE
1T15M-6
W01 358 9082
GOODYEAR
1R 12-092
AIRTECH
34156 05 KPP

GRANNING

HENDRICKSON B2066
NEWAY 90557027

199122-CS

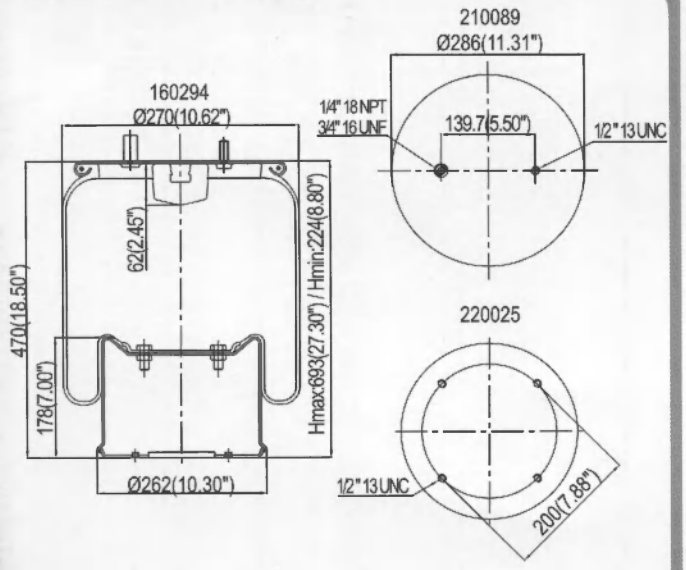

Order No
160294
weight(kg)
11,8
QIP(pcs)
22
Remarks

AIRTECH
3813 K05

199122-CP

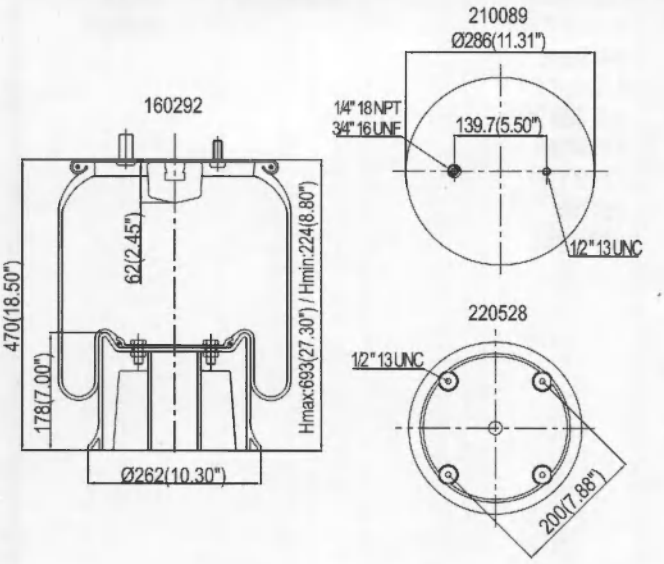

Order No	CONTITECH	DAYTON 352-9122
160292	11 10.5-21 A 313	HENDRICKSON S3467 / S3830
weight(kg)	FIRESTONE	LOAD GUARD SC2041
9	1T19F-11 / 1T19L-11	NAVISTAR 554772C1
QIP(pcs)	W01 358 9122	NEWAY 90557020
22	GOODYEAR	
Remarks	1R 13-038	

199270-CS

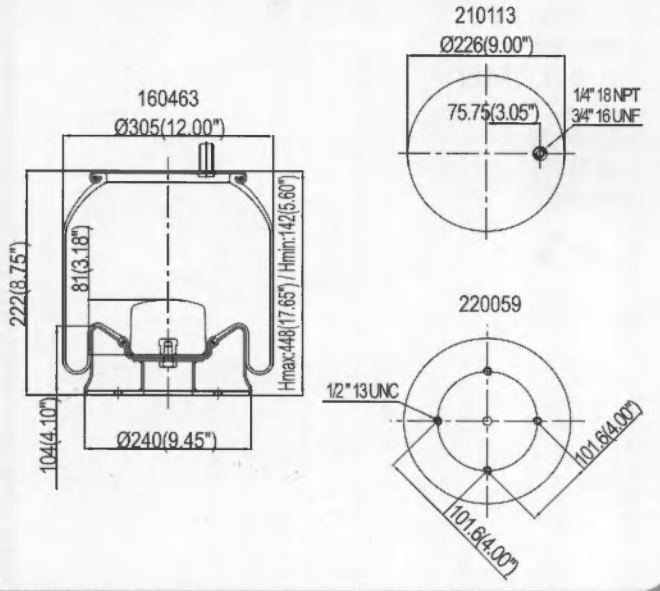

Order No	CONTITECH	HENDRICKSON C20010 / C 20108
160463	9 10-13.5 S 433	WATSON&CHAL•N AS-0084
weight(kg)	FIRESTONE	
11	1T15VP-4	
QIP(pcs)	W01 358 9270	
30	GOODYEAR	
Remarks	1R 13-119	
	AIRTECH	
	39270 K	

198050-CS

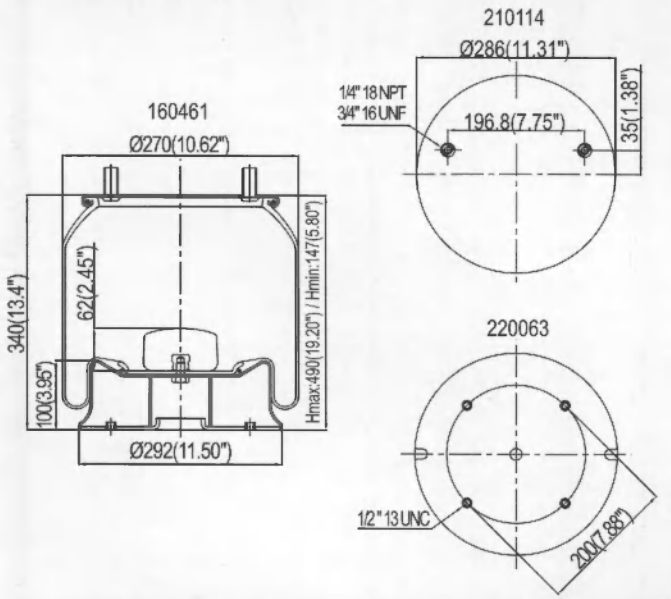

Order No	CONTITECH	HENDRICKSON S4771
160461	11 10.5C-16 P 320	12514-013
weight(kg)	FIRESTONE	WATSON&CHAL•N 0039
14,5	1T19ZK-5.7	
QIP(pcs)	W01 358 8050	
30	GOODYEAR	
Remarks	1R 14-039	
	AIRTECH	
	38050 K	

199580-CS

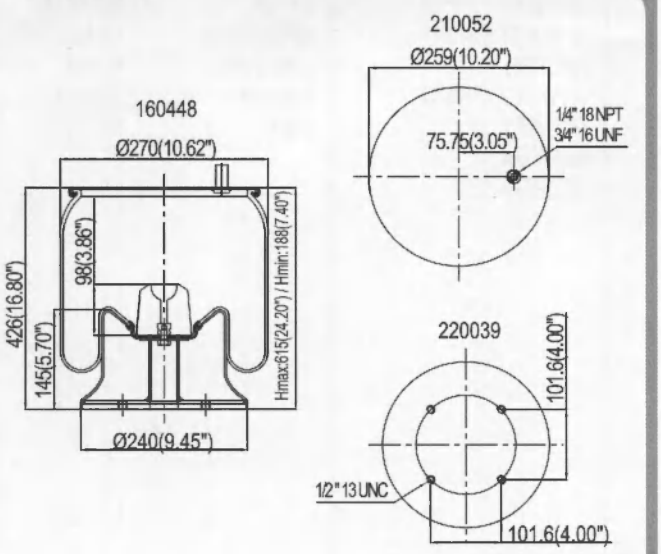

Order No	CONTITECH	HENDRICKSON	S20127
160448	9 10-21 P 448		HS50600
weight(kg)	FIRESTONE		
14	1T17CL-9.5		
QIP(pcs)	W01 358 9580		
30	GOODYEAR		
Remarks	1R 13-118		
	AIRTECH		
	30081 01 K		

199156-CS

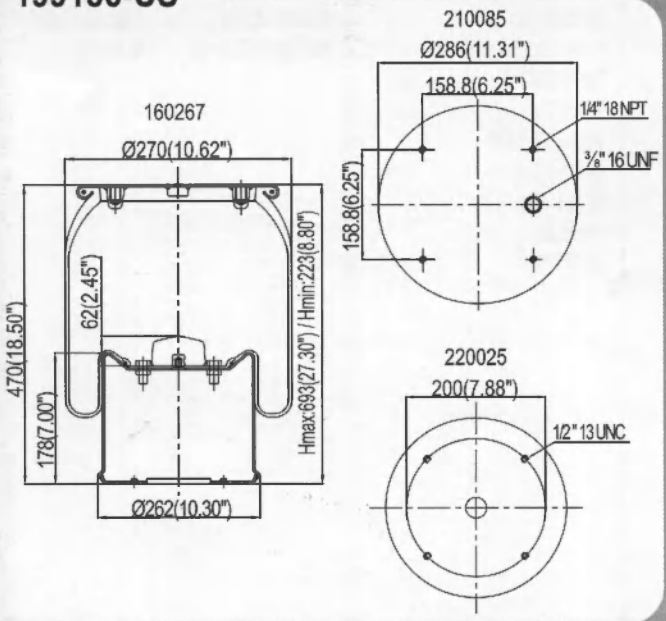

Order No	CONTITECH	HENDRICKSON	S7128
160267	11 10.5-21 A 370		
weight(kg)	FIRESTONE		
10,8	1T19F-11 / 1T19L-11		
QIP(pcs)	W01 358 9156		
25	GOODYEAR		
Remarks	1R 14-019		
	PHOENIX		

199156-CP

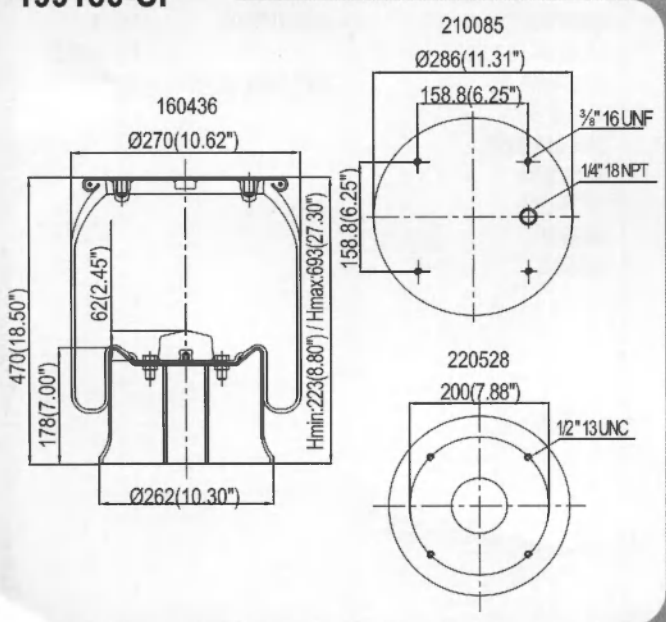

Order No			
160436			
weight(kg)			
6,5			
QIP(pcs)			
30			
Remarks			

199580-CP

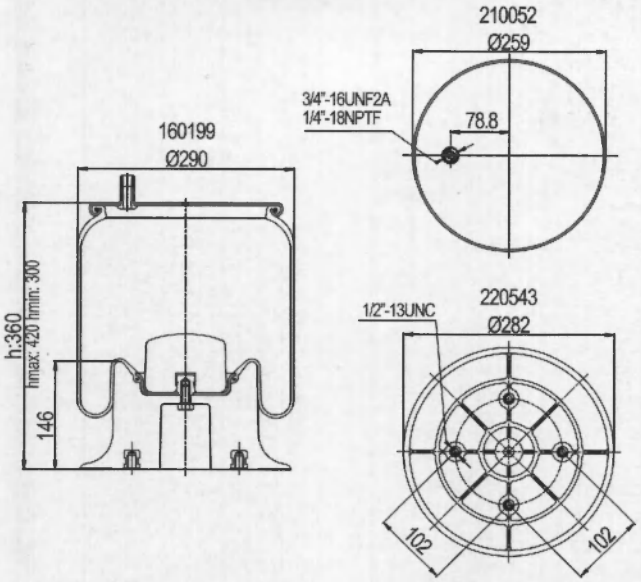

Order No
160199

199321-CS

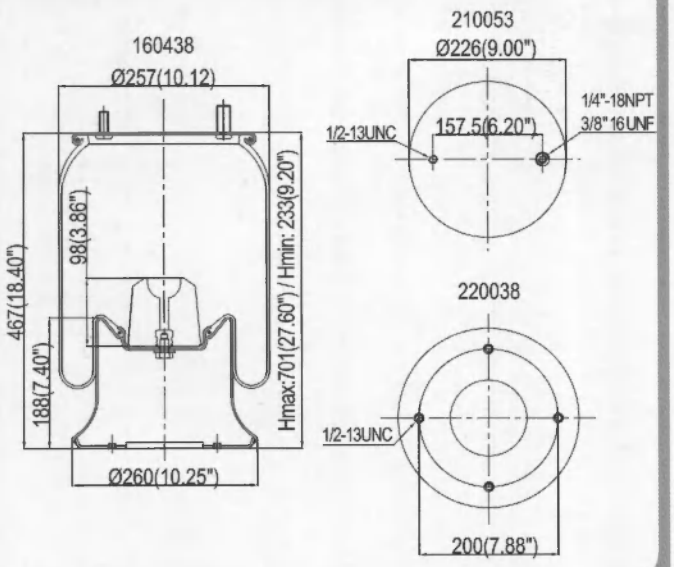

Order No 160438 weight(kg) 9,5 QIP(pcs) 30 Remarks		

199321-CP

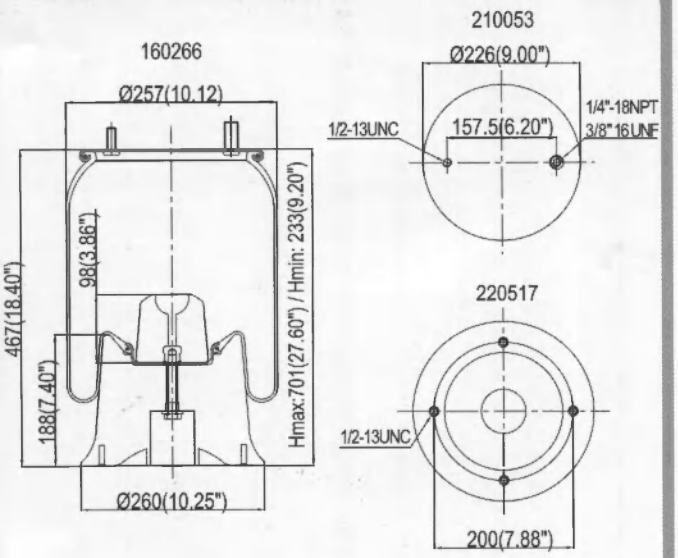

Order No 160266 weight(kg) 7 QIP(pcs) 30 Remarks	CONTITECH 9 10-21 P 361 FIRESTONE 1T15M-11 W01 358 9321 GOODYEAR 1R 12-256	HENDRICKSON NS501304 WATSON&CHALON AS 0036

199069-CP

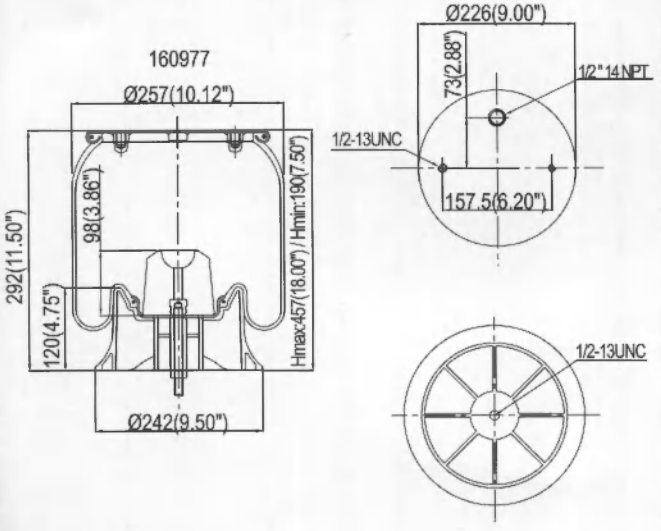

Order No 160977 weight(kg) 6,5 QIP(pcs) 30 Remarks	CONTITECH 9 10-14 P 312 FIRESTONE 1T15M-4 W01 358 9069 GOODYEAR 1R 12-069 AIRTECH 39069 K	DAF 526651 DAYTON 352-9069 FODEN 1300248000 LOAD GUARD SC2034 NAVISTAR 554764C1 PETERBILT 03-01649 WATSON&CHALIN AS-0077

199394-CP

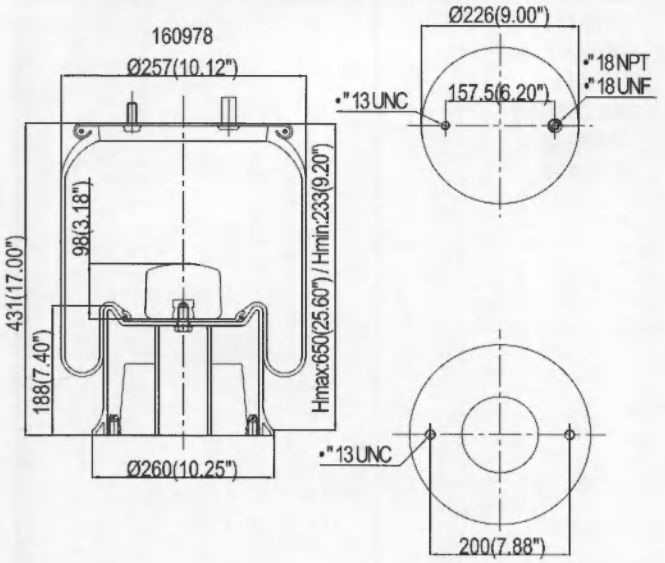

Order No	CONTITECH	FRUEHAUF	UCD-9393-2
160978	9 10-19 P 383		
weight(kg)	FIRESTONE		
8,5	1T15M-9		
QIP(pcs)	W01 358 9394		
30	GOODYEAR		
Remarks	1R 12-281		

199921-CP

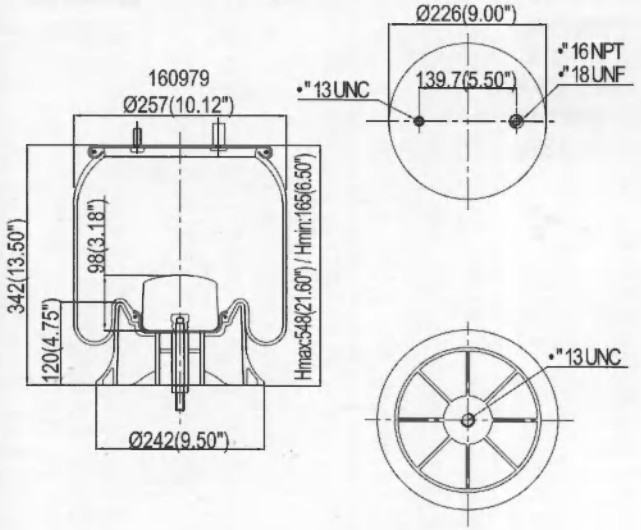

Order No	CONTITECH	HENDRICKSON	NS501304
160979	9 10-17.5 P 443		
weight(kg)	FIRESTONE		
7,8	1T15M-11		
QIP(pcs)	W01 358 9321		
30	GOODYEAR		
Remarks	1R 12-256		

199265-CS

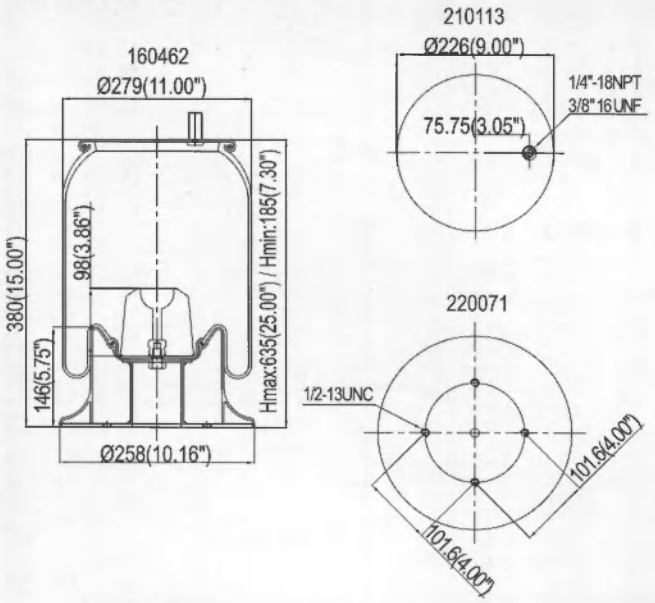

Order No	CONTITECH	HENDRICKSON	NS501304
160979	9 10-17.5 P 443		
weight(kg)	FIRESTONE		
7,8	1T15M-11		
QIP(pcs)	W01 358 9321		
30	GOODYEAR		
Remarks	1R 12-256		

198755-CS

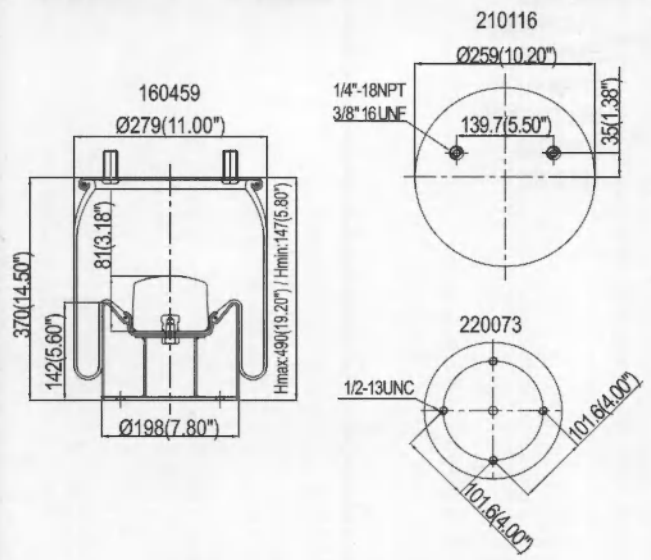

Order No	CONTITECH	HENDRICKSON	S22046 / C21624
160459	10 10-15 S 522		
weight(kg)	FIRESTONE		
11	1T17B-5		
QIP(pcs)	W01 358 8755		
30	GOODYEAR		
Remarks	1R 13-124		

199640-CS

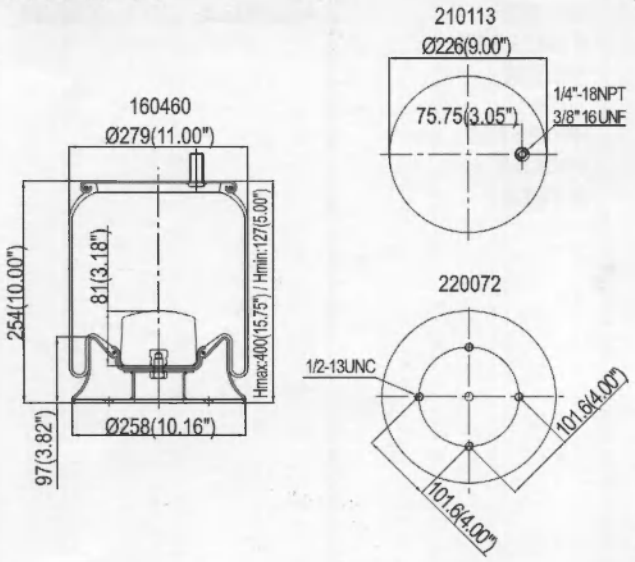

Order No	CONTITECH	HENDRICKSON	S20223 / HT-HS190-T 190T
160460	9 10-12 A 427		
weight(kg)	FIRESTONE		
10	1T15MT-3		
QIP(pcs)	W01 358 9640		
30	GOODYEAR		
Remarks	1R 12-367		

199367-CS

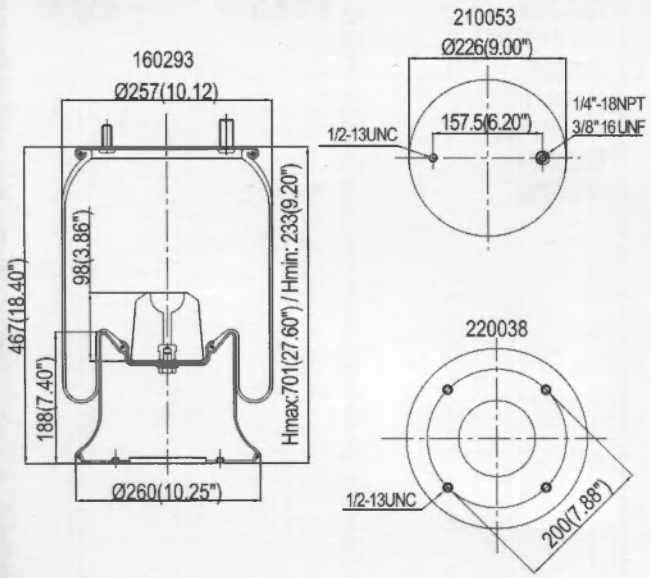

Order No			
160293			
weight(kg)			
11,2			
QIP(pcs)			
22			
Remarks			

199367-CP

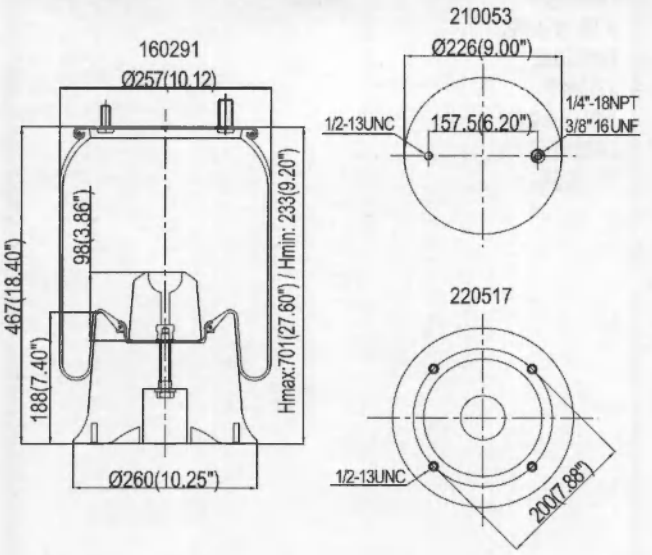

Order No 160291 weight(kg) 8,6 QIP(pcs) 22 Remarks	CONTITECH 9 10-21 P 505 FIRESTONE 1T15M-11 W01 358 9367 GOODYEAR 1R 12-256	HENDRICKSON	S14249

199780-CALU

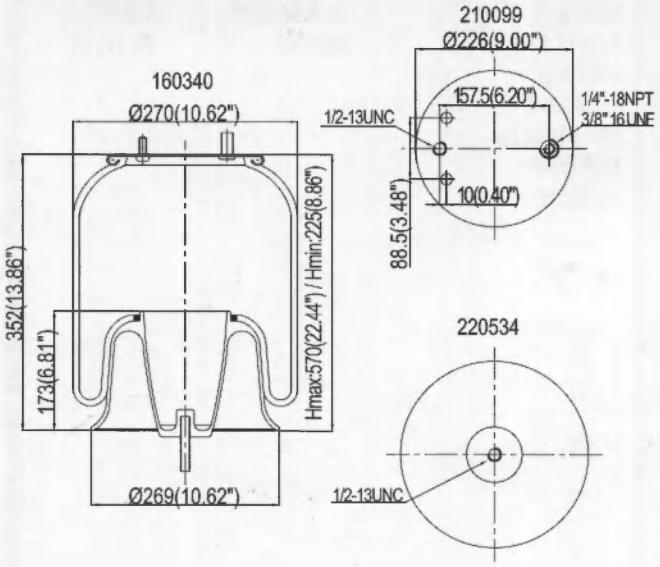

Order No 160340 weight(kg) 9,4 QIP(pcs) 20 Remarks	GOODYEAR 1R12-603		

199780-CP

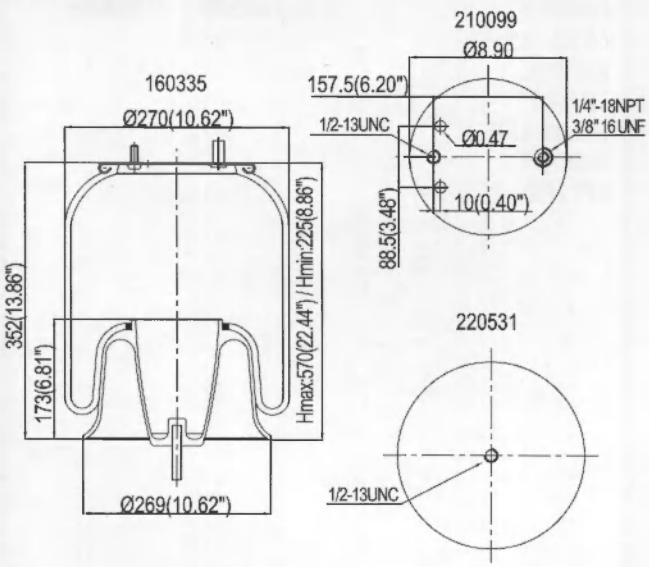

Order No 160335 weight(kg) 6,6 QIP(pcs) 20 Remarks	CONTITECH 9 10S-16 A 382 FIRESTONE 1T15ZR-6 W01 358 9780 GOODYEAR 1R 12-303		

AIR EXPERT

198204-CS

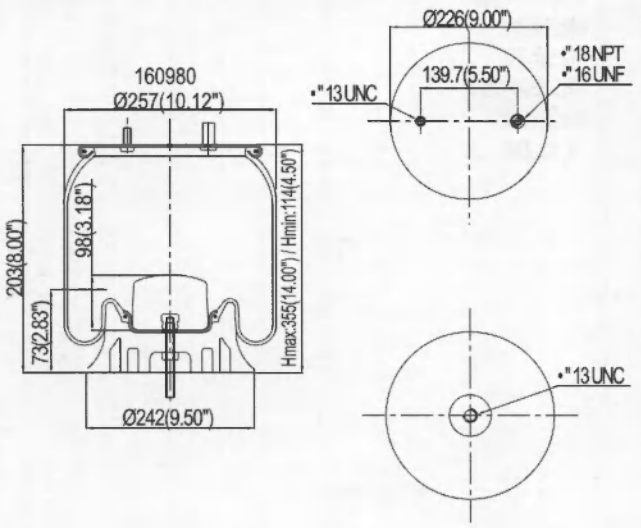

Order No	CONTITECH	NEWAY	90557223
160980	9 10-12 P 484		
weight(kg)	FIRESTONE		
7	1T15M-2		
QIP(pcs)	W01 358 8204		
30	GOODYEAR		
Remarks	1R 12-522		

198944-CP

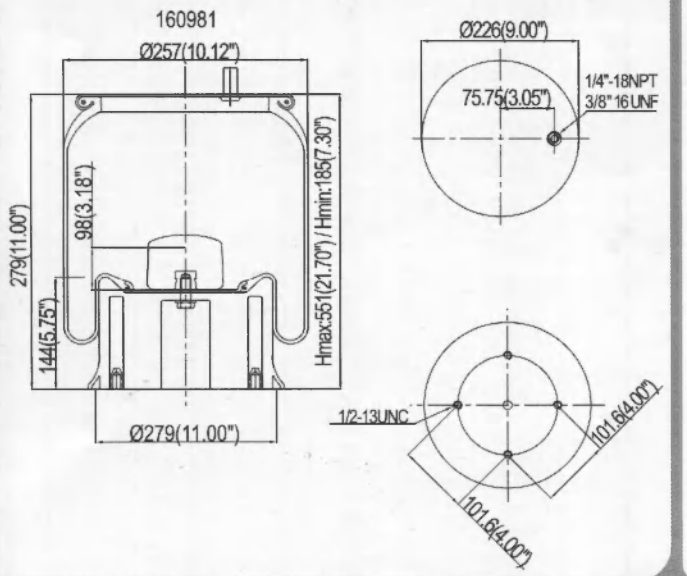

Order No	CONTITECH	HENDRICKSON	S20217
160981	9 10-17.5 P 436	NEWLITE	NS 190-16
weight(kg)	FIRESTONE		
9	1T15MLW-7		
QIP(pcs)	W01 358 8944		
30	GOODYEAR		
Remarks	1R 12-366		

198729-CS

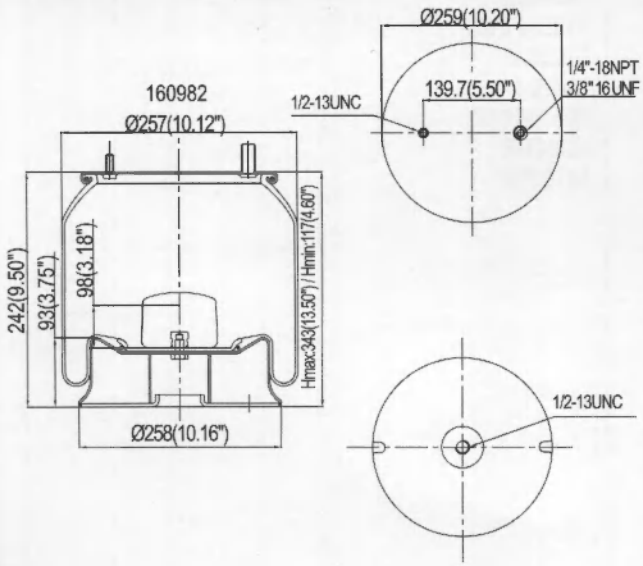

Order No	CONTITECH	R.O.R / MERITOR	2022729
160982	10 10B-13 S 513		
weight(kg)	FIRESTONE		
9,7	1T17BB-2		
QIP(pcs)	W01 358 8729		
30	GOODYEAR		
Remarks	1R 13-130		

199370-CP

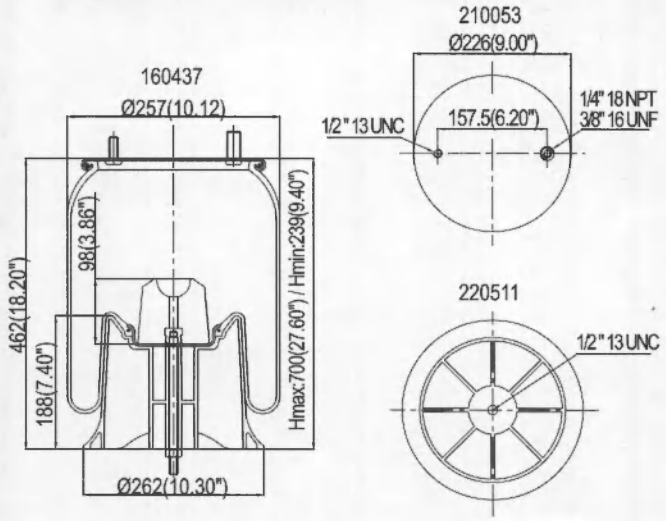

Order No	CONTITECH	WATSON&CHALIN	0057
160437	9 10-21 P 448		
weight(kg)	FIRESTONE		
7	1T15M-11		
QIP(pcs)	W01 358 9370		
30	GOODYEAR		
Remarks	1R 12-440		

198091-CS

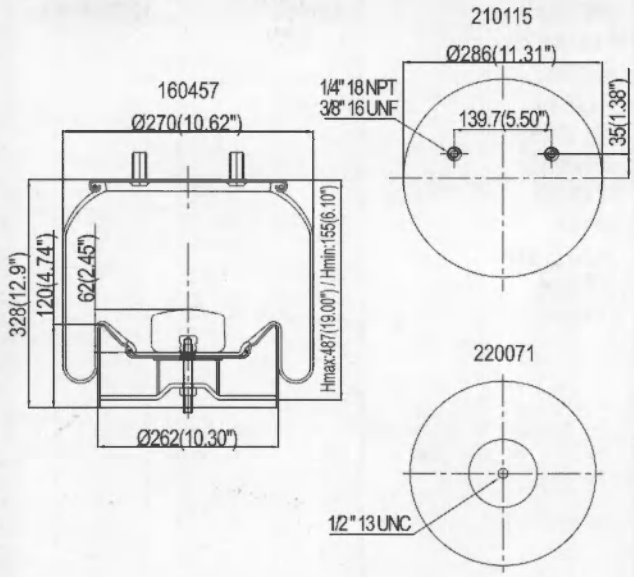

Order No	CONTITECH	HENDRICKSON	S20901 / S21784
160457	11 10.5A-16 P 523		
weight(kg)	FIRESTONE		
15	1T19FC-6 / 1T19LC-6		
QIP(pcs)	W01 358 8091		
22	GOODYEAR		
Remarks	1R 14-171		

198709-CS

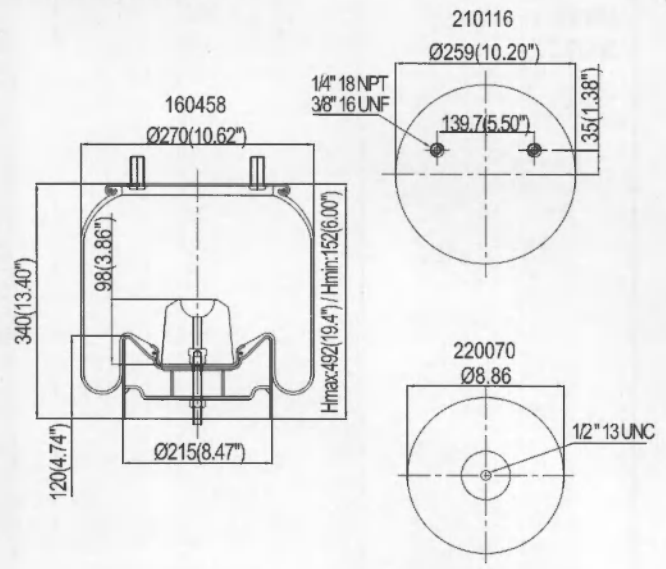

Order No	CONTITECH	HENDRICKSON	S21800 / AA230
160458	10 10.5-15 P 460		
weight(kg)	FIRESTONE		
14	1T17CA-5		
QIP(pcs)	W01 358 8709		
22	GOODYEAR		
Remarks	1R 13-159		

199101-CS

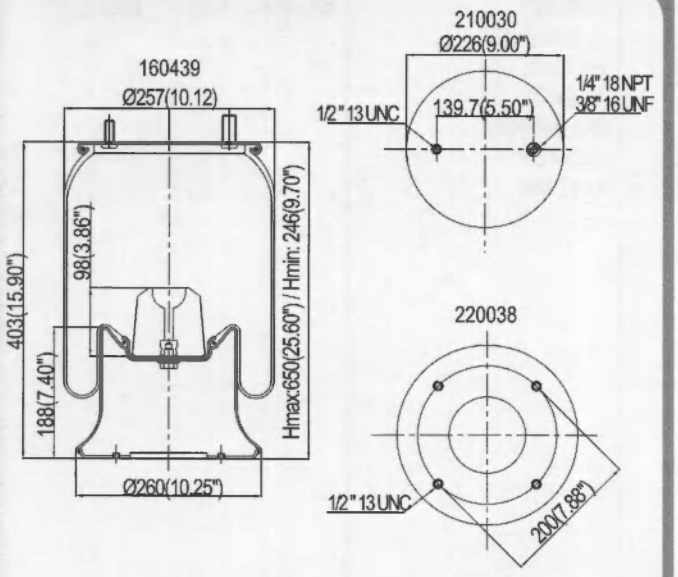

Order No
160439
weight(kg)
11
QIP(pcs)
22
Remarks

199101-CP

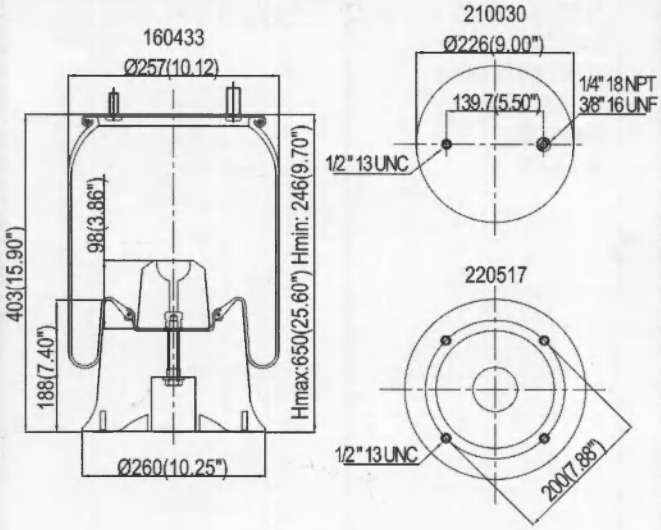

Order No
160433
weight(kg)
7
QIP(pcs)
30
Remarks

CONTITECH
9 10-19 P 315
FIRESTONE
1T15M-9
W01 358 9101
GOODYEAR
1R 12-103
AIRTECH
34159 07 KPP
CF GOMMA
1T 323-40

NEWAY 1003589101C

199121-CS

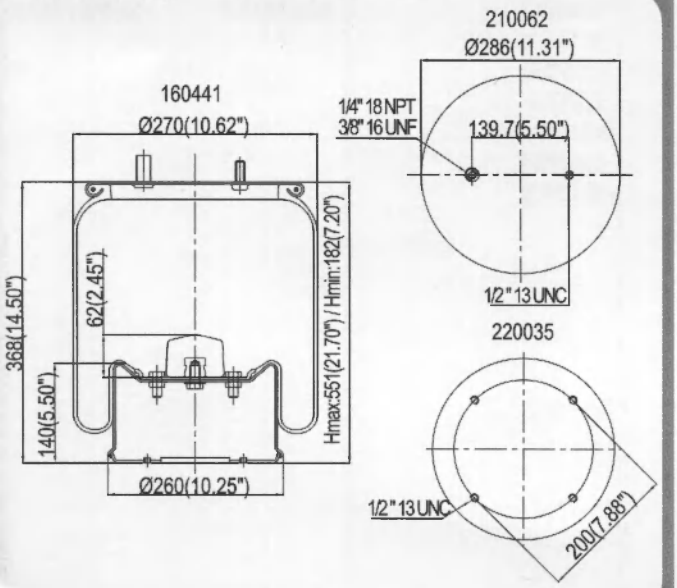

Order No
160441
weight(kg)
12
QIP(pcs)
30
Remarks

AIRTECH
39121 K

199121-CP

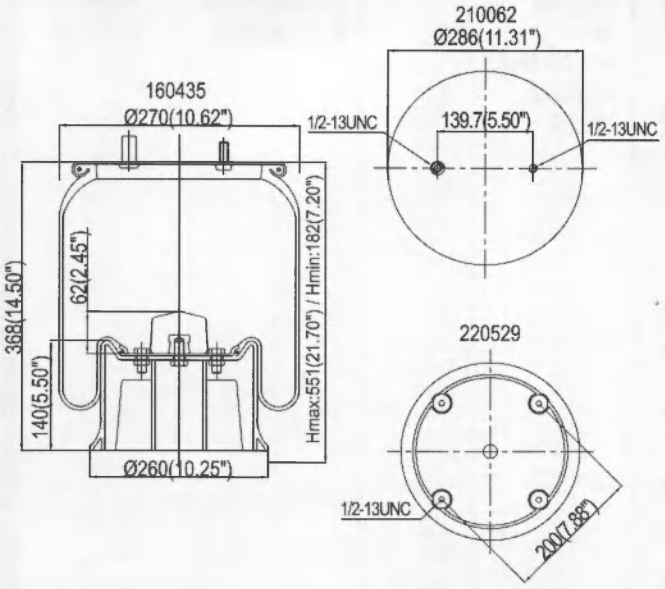

Order No	CONTITECH	DAYTON	352-9121
160435	11 10.5-17 A 317	HENDRICKSON	B-3411
weight(kg)	FIRESTONE	NAVISTAR	554773C1
6,8	1T19F-7 / 1T19L-7	NEWAY	90557019
QIP(pcs)	W01 358 9121		
30	GOODYEAR		
Remarks	1R 12-039		
	AIRTECH		
	39121 K		

199366-CS

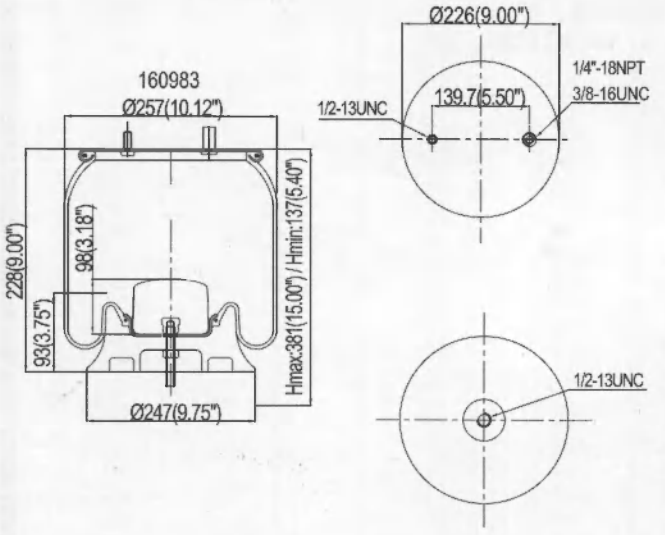

Order No	CONTITECH	NEWAY	90557160
160983	9 10-12 A 488	WATSON&CHALIN	0054
weight(kg)	FIRESTONE		
10,5	1T15M-2		
QIP(pcs)	W01 358 9366		
30	GOODYEAR		
Remarks	1R 12-487		

199243-CP

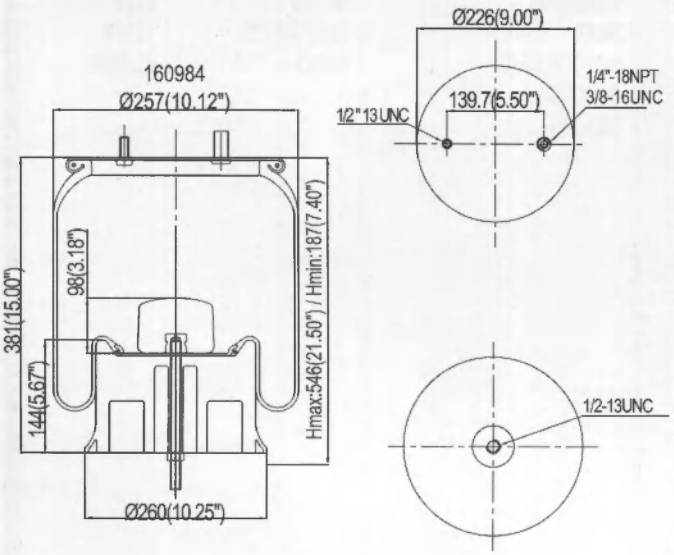

Order No	CONTITECH	NEWAY	90557112
160984	9 10-19 P 384	WATSON&CHALIN	0061
weight(kg)	FIRESTONE		
7,5	1T15M-9		
QIP(pcs)	W01 358 9243		
30	GOODYEAR		
	1R 12-480		

C 196890

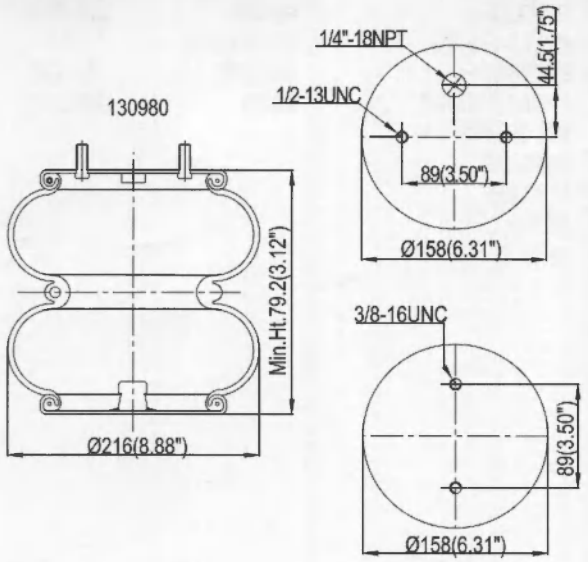

Order No	FIRESTONE	WATSON&CHALIN	AS-0035
130980	20 F	R.O.R./MERTIOR	90557228
weight(kg)	W01 358 6908		
7	GOODYEAR		
QIP(pcs)	2B9-210		
30			
Remarks			

C 196900

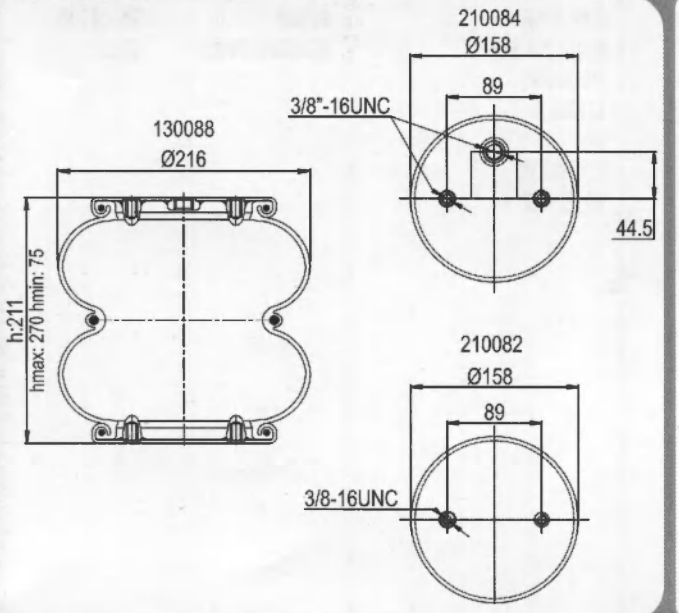

Order No	FIRESTONE	ZORZI	0039
130988	20 CT		
weight(kg)	W01 358 6900		
7			
QIP(pcs)			
30			
Remarks			

C 196910

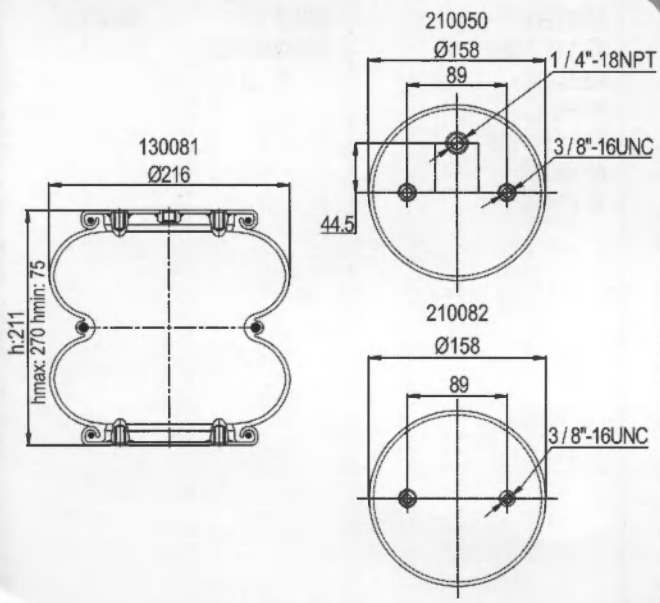

Order No	FIRESTONE	KAISER	1371
130081	20 CT	LOAD GUARD	S8768
weight(kg)	W01 358 6910	ZORZI	AS-0001
7	GOODYEAR		
QIP(pcs)	2B9-200		
30			
Remarks			

AIR EXPERT

C 196926

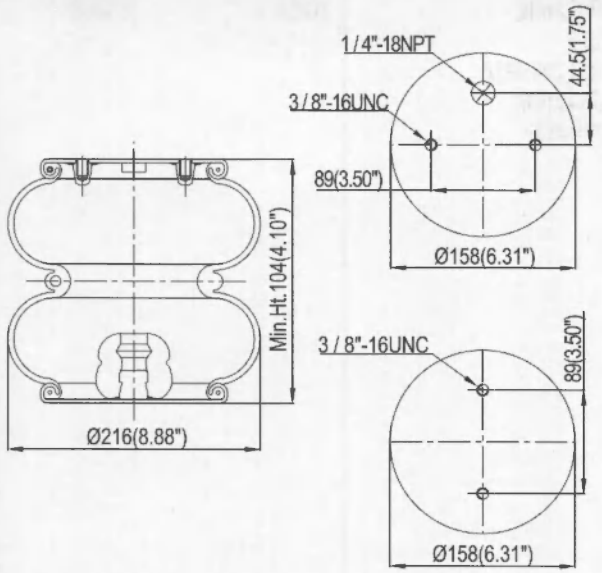

Order No 130986 weight(kg) 7 QIP(pcs) 30 Remarks	FIRESTONE 20 CT W01 358 6926	ZORZI	AS-0084

C 196856

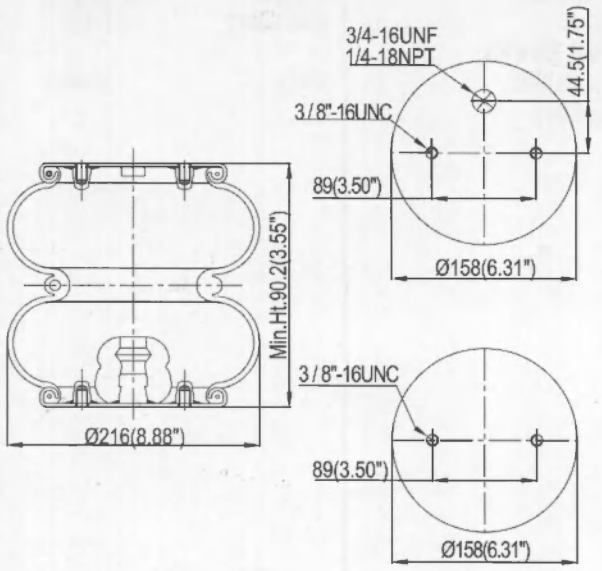

Order No 130985 weight(kg) 7 QIP(pcs) 30 Remarks	FIRESTONE 20 F W01 358 6856	KAISER ZORZI	702932-01 AS-0077

C 196884

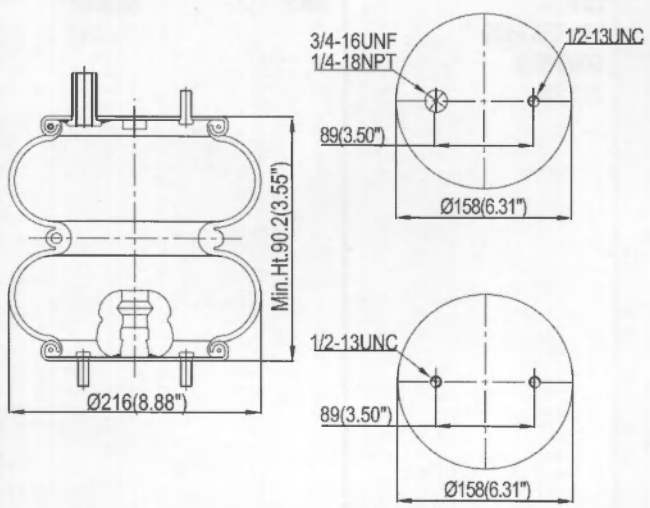

Order No 130984 weight(kg) 7 QIP(pcs) 30 Remarks	FIRESTONE 20 F W01 358 6884		

AIR EXPERT

C 196897

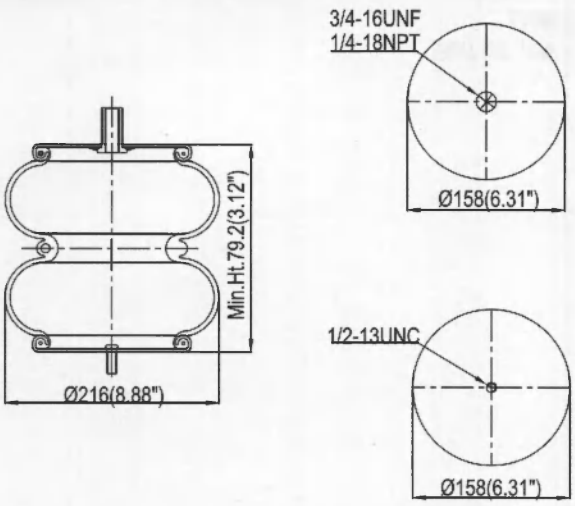

Order No	FIRESTONE	ZORZI	AS-0058
130983	20 F		
weight(kg)	W01 358 6897		
7	GOODYEAR		
QIP(pcs)	2B9-229		
30			
Remarks			

C 196902

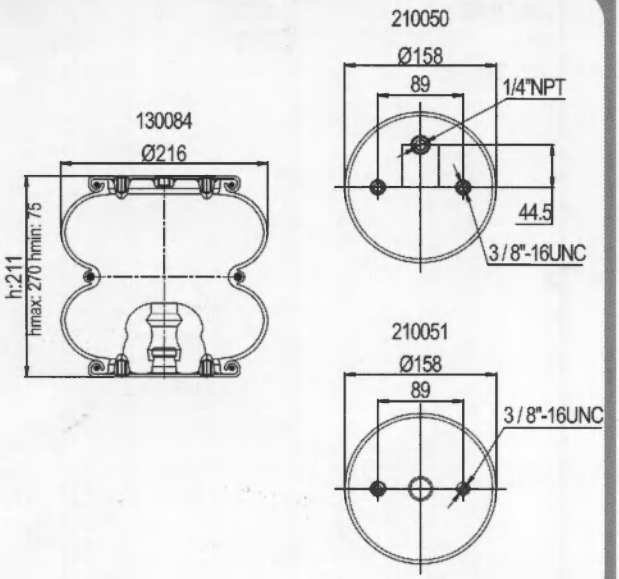

Order No	FIRESTONE	KAISER	4848
130084	20 F	LOAD GUARD	S2630
weight(kg)	W01 358 6902		
7	GOODYEAR	ZORZI	AS-0002
QIP(pcs)	2B9-201		
30			
Remarks			

C 196905

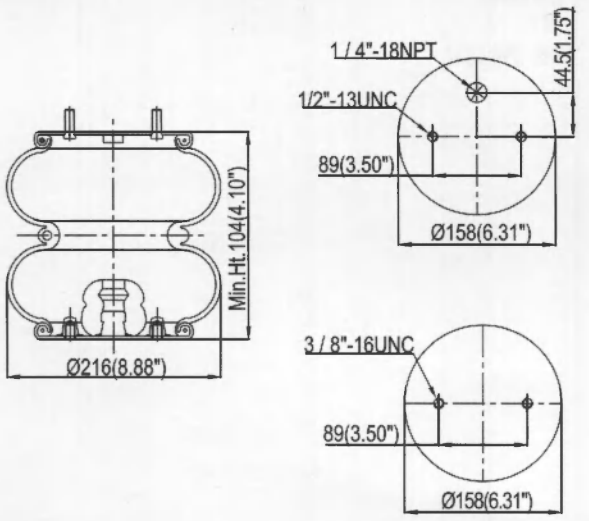

Order No	FIRESTONE	LOAD GUARD	S3518 / S5270
130981	20 F	ZORZI	AS-0020
weight(kg)	W01 358 6905		
7	GOODYEAR		
QIP(pcs)	2B9-206		
30			
Remarks			

C 196908

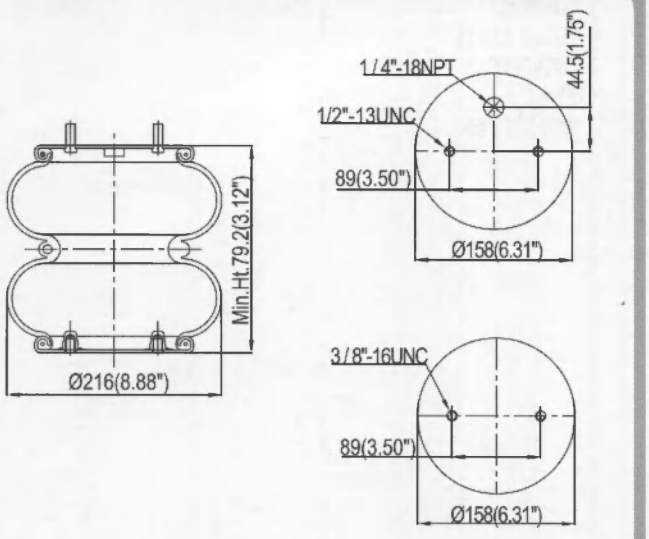

Order No	FIRESTONE	WATSON&CHALIN	AS-0035
130980	20 F		
weight(kg)	W01 358 6908		
7	GOODYEAR		
QIP(pcs)	2B9-210		
30			
Remarks			

C 196932

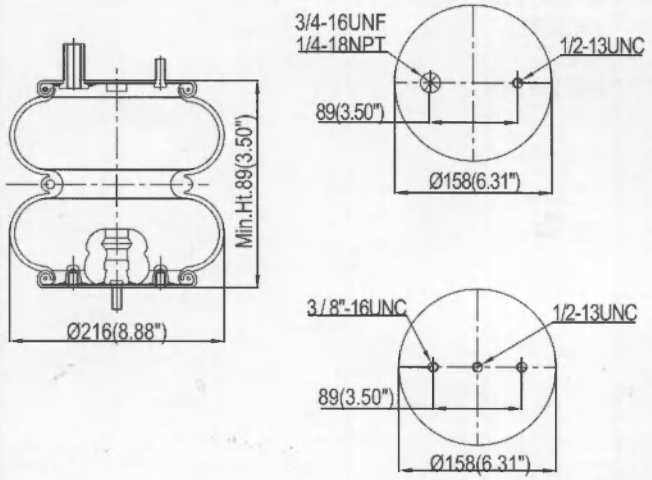

Order No	FIRESTONE
130979	20 F
weight(kg)	W01 358 6932
7	GOODYEAR
QIP(pcs)	2B9-246
30	
Remarks	

C 196935

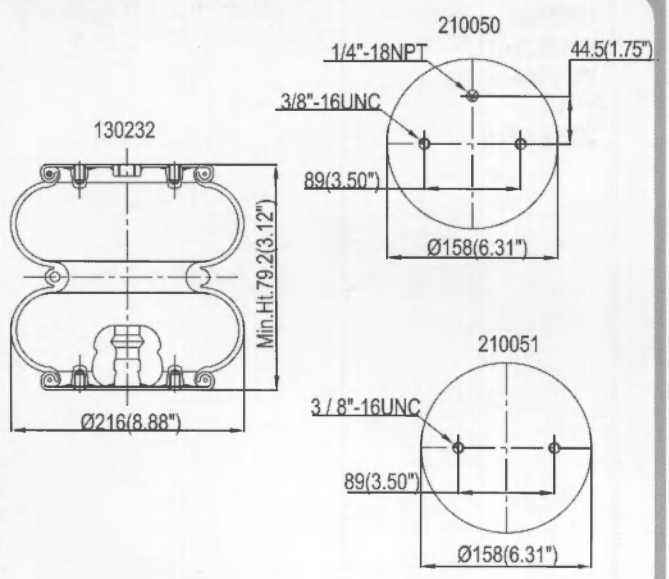

Order No	CONTITECH
130232	FD 200-19 499
weight(kg)	FIRESTONE
7	20 F
QIP(pcs)	W01 358 6935
30	
Remarks	

C 197400

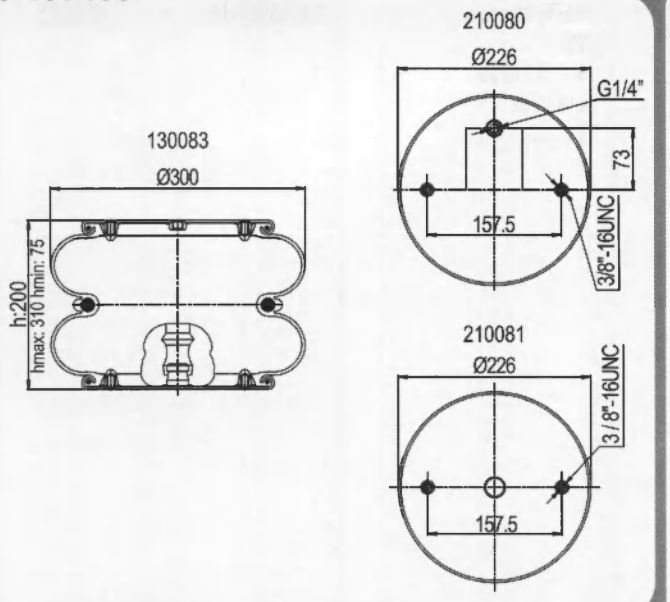

Order No 130083 weight(kg) 5.69 QIP(pcs) 40 Remarks	CONTITECH FD 330-22 313 FIRESTONE 22 C W01 358 7400	

C 197410

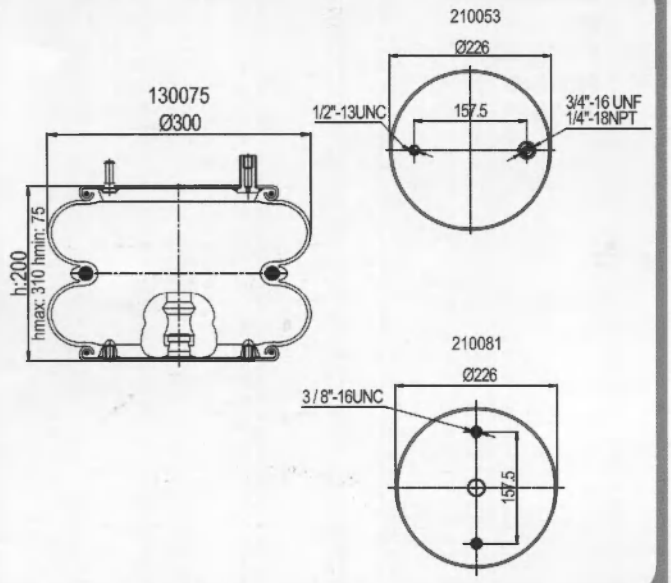

Order No 130075 weight(kg) 5.69 QIP(pcs) 40 Remarks	CONTITECH FD 330-22 331 FIRESTONE 22 C W01 358 7410	

C 197135

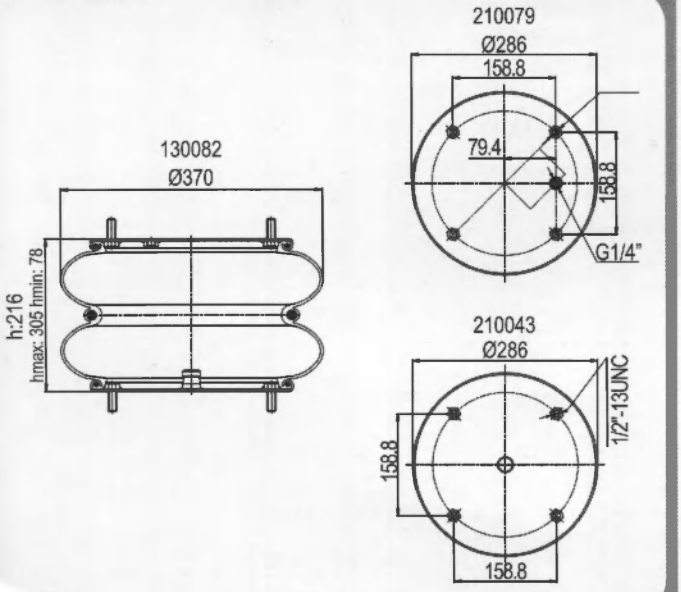

Order No 130082 weight(kg) 9.37 QIP(pcs) 30 Remarks	CONTITECH FD 530-22 311 FIRESTONE 21 D W01 358 7135	

C 197784

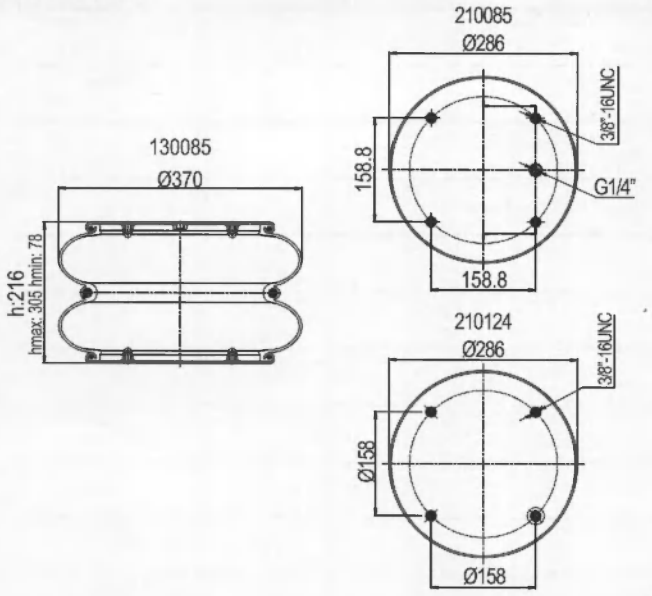

Order No	FIRESTONE
130085	233 2
weight(kg)	W01 358 7784
9.37	GOODYEAR
QIP(pcs)	2 B 14-465
30	
Remarks	

C 197443

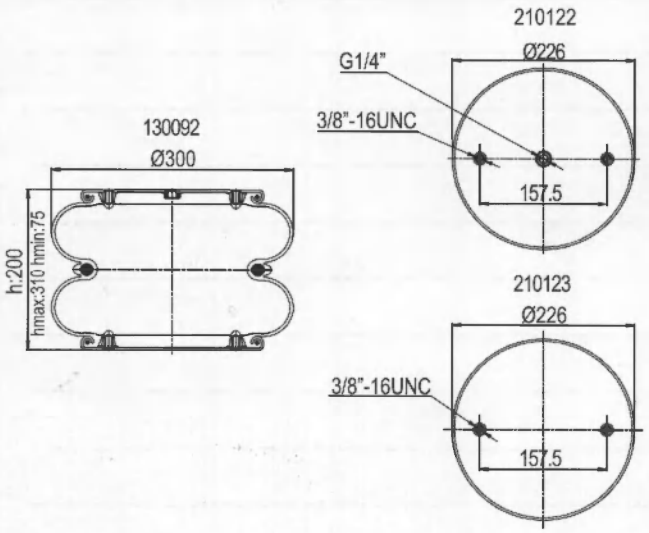

Order No	CONTITECH
130092	FD 330-30 323
weight(kg)	FIRESTONE
5.69	22 C
QIP(pcs)	W01 358 7443
30	
Remarks	

C 197897

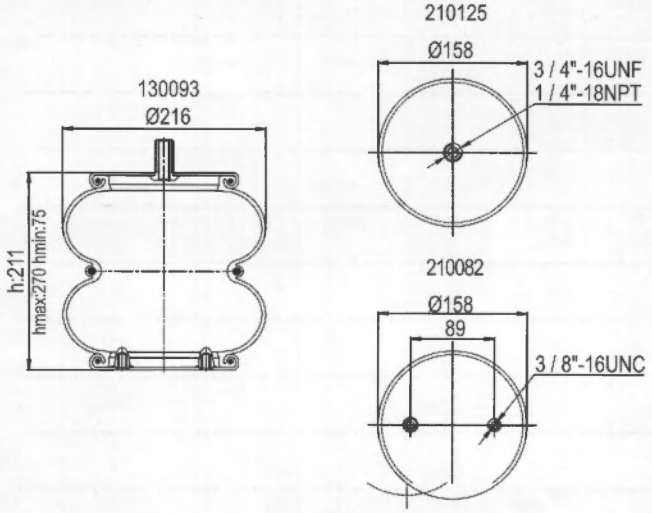

Notes

MEKPA OTOMOTİV İTHALAT-İHRACAT SAN. VE TİC. LTD. ŞTİ.
Organize Sanayi Bölgesi Mor Cad. No:2 16159 - BURSA/TÜRKİYE
Phone: +90(224) 411 16 76
Fax: +90(224) 411 16 79
info@meklas.com